ARMEL ELECTRONICS INC.

ARMEL
ELECTRONICS, INC.

- Printed Circuit Board Connectors
- Rack and Panel Connectors
- Relay Sockets
- Stand-Off Terminals

1.800.840.0666

Armel Electronics, Inc.

Mil-Spec Electronic Components
ISO 9001 Registered

Armel Electronics Inc. was established in 1949**.**

Armel has become a recognized leader in the field of military and commercial avionics. Armel has also been influential in aerospace technology, supplying components for today's Space Shuttle missions and as far back as the Mars Mariner Probe of the 1960's.

Armel is constantly on the lookout for new areas of endeavor and new projects.

If you are involved in specification or general design work involving printed circuit board connectors, relay sockets or standoff terminals, then please call us for more detailed literature.

Armel Electronics Inc., is looking forward to your business well into the 21st Century.

Armel Electronics Inc.
1601 75th street
North Bergen, NJ 07047

Toll Free:	**800.840.0666**
Phone:	**201.869.4300**
Fax:	**201.869.4304**
E-mail:	**info@armelelectronics.com**
Website:	**www.armelelectronics.com**

GENERAL SPECIFICATIONS

ALL THE COMPONENTS ARE MANUFACTURED IN ACCORDANCE WITH THE FOLLOWING **MIL-SPECS**:

MIL-S-12883
Relay Sockets - meet or exceed

MIL-C-55302
Printed Circuit Connectors - meet or exceed

MIL-M-14 (ASTM-D-5948-96)
Insulation Material - diallyl ortho phthalate

MIL-G-45204 (ASTM-B-488-95)
Contact Plating - meet or exceed

MIL-I-45208
Inspection System Requirements - meet or exceed

MIL-I-45662
Test Facility Requirements - meet or exceed

HANDLING REQUIREMENTS
Temperature Rating:
-65°C to +125°C

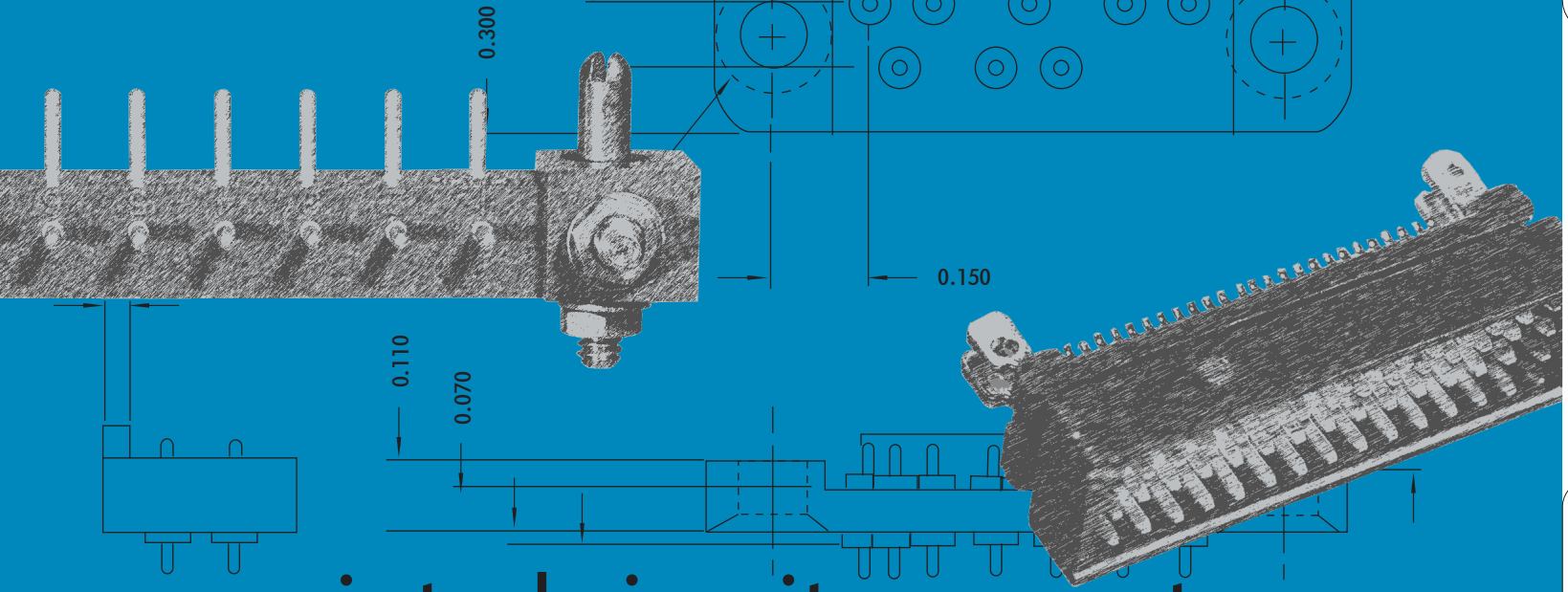

printed circuit connectors

ARMEL®

PRINTED CIRCUIT CONNECTOR INDEX

The printed circuit connectors produced by Armel Electronics, Inc. have been designed to comply with the highest performance requirements for aircraft, communication, and other electronic systems. Rigorous, in-process inspections and stringent quality control requirements guarantee the required performance.

These connectors, designed for today's applications, offer proof of our capability to design connectors for your specific requirement.

SPECIFICATIONS

Listed below are the general specifications applicable to the AB type printed circuit connectors.

ELECTRICAL

Current Rating	5 Amperes
Dielectric Withstanding Voltage	
Contact to Contact Sea Level	1000 Volts RMS Minimum
Contact to Contact 70,000 Feet	300 Volts RMS Minimum

MECHANICAL

Contact Diameter	0.030 Inch
Creepage Between Contacts	0.07 Inch Minimum
Air Space Between Contacts	0.07 Inch Minimum
Polarization	Guide Pins and Contact Arrangement
Socket Contacts	Beryllium Copper Gold Plated (0.00005 inch)
Pin Contacts	Brass, Hot Solder Dipped, Centriuged and Reflowed Solder 0.0001 to 0.00025 inch
Guide Pins	Brass, Nickel Plated
Insulation Material	Phenolic, Glass Filled, MIL-M-14, Type MFH, color Black
Temperature Range	-65°C to +125°C

Approximate Weight

AB 8 (Pin)	0.10 oz.
AB 8 (Socket)	0.10 oz.

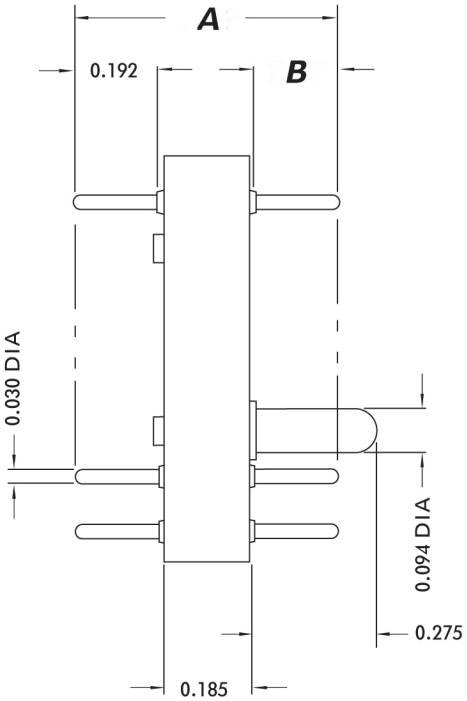

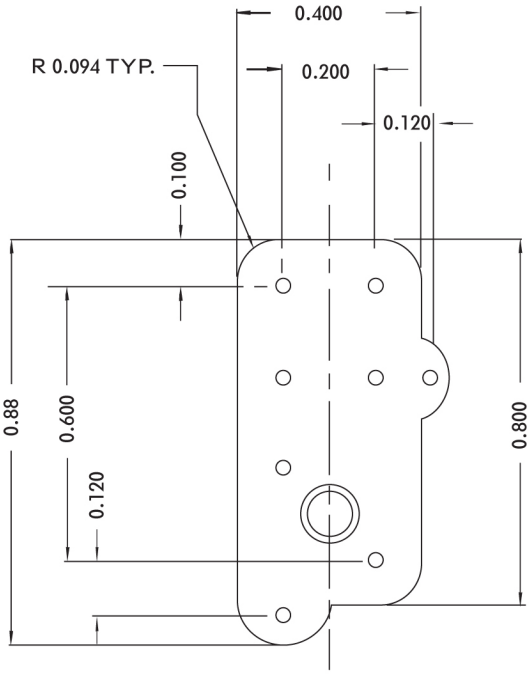

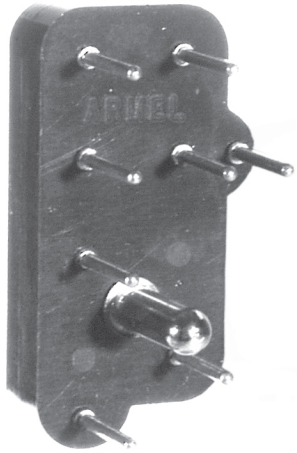

PART NO.	A	B
AB-8P-1RF	0.59	0.192
AB-8P-2RF	0.65	0.275

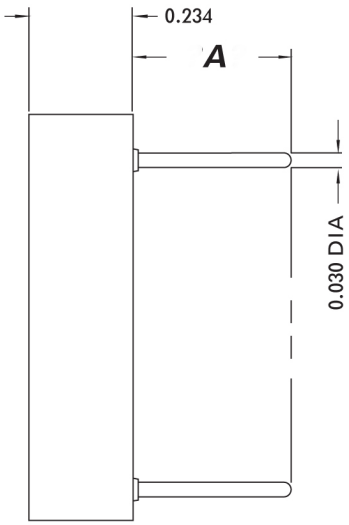

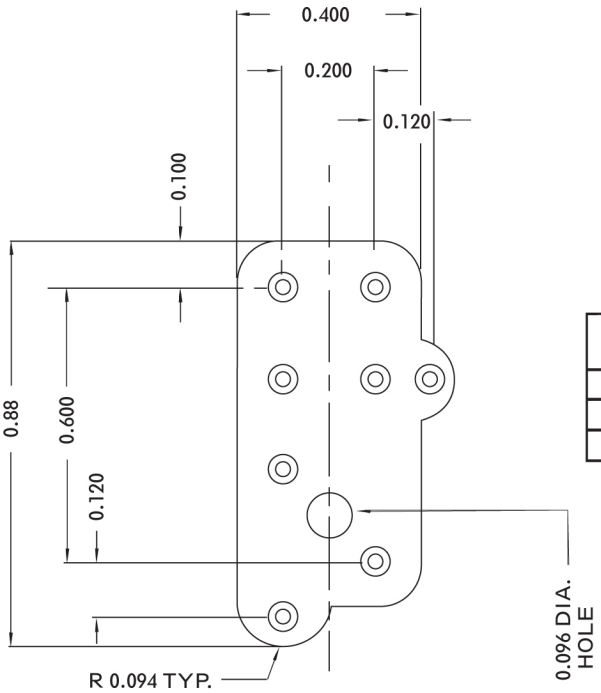

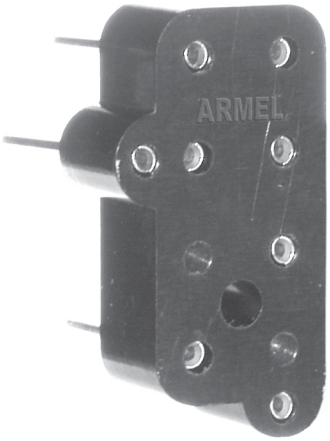

PART NO.	A
AB-8S-4RF	0.10
AB-8S-6RV2	0.35
AB-8S-9RF	0.13

FOR MECHANICAL AND ELECTRICAL SPECIFICATIONS SEE PAGE 01

SPECIFICATIONS

Listed below are the general specifications applicable to the AP type printed circuit connectors.

ELECTRICAL

Contact Rating	3 amperes
Solder Cup Accomodation	One #24 AWG Wire
Dielectric Withstanding Voltage	
Contact to Contact, Sea Level	1000 Volts RMS Minimum
Contact to Contact, 70,000 Ft.	300 Volts RMS Minimum

MECHANICAL

Contact Diameter	0.028 Inch
Creepage Between Contacts	0.06 Inch Minimum
Air Space Between Contacts	0.06 Inch Minimum
Polarization	Guide Pins and Contact Arrangement
Socket Contacts	Spring Tempered Beryllium Copper, Gold Plated (0.0001 Inch)
Pin Contacts	Beryllium Copper, Gold Plated (0.0001 Inch)
Guide Pins and Rivets	Stainless Steel, Passivated
Guide Sockets and Rivets	
Solder Cup Assembly	Stainless Steel, Passivated
Straight Pin Assembly	Brass, Nickel Plated
Insulation Material	Diallyl Phthalate, Orlon Filled, Mil-M-14, Type SDI-5
Temperature Range	-65? C to +125? C
Approximate Weight	
AP23 (pin)	0.13 oz.
AP23 (socket)	0.15 oz.

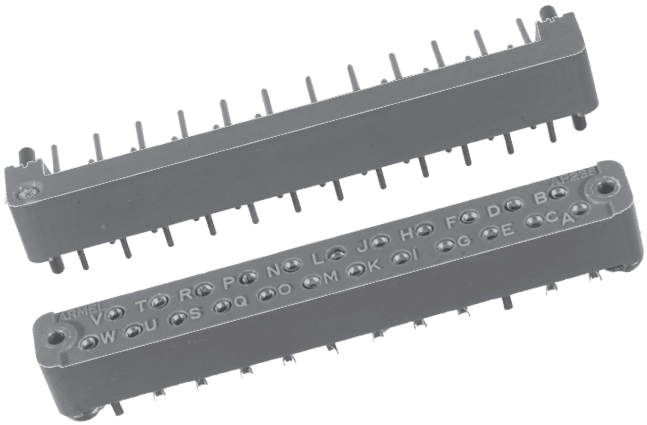

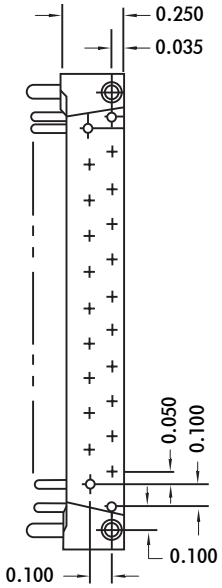

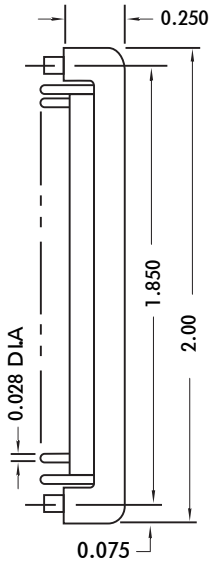

PLUG

CONTACT DATA		MOUNTING DATA							
		PANEL THICKNESS	DIMENSION						
			X	A	RIVET (0.060 DIA., A)	B	CHASSIS (0.109 DIA., B)	C	RIVET (0.060 DIA., C)
PLUG	RIGHT ANGLE (X)	.06	.10	.09	AP 23P - 1HW				
		.09							
		.12							
RECEPTACLE	STRAIGHT (X)								
		.06	.11					.09	AP 23S - 4 HW
		.09							
		.12	.18					.16	AP 23S - 744 HW
	SOLDER CUP (0.12)								
		.06				.05	AP 23S - 51HW	.09	AP 23S - 61HW

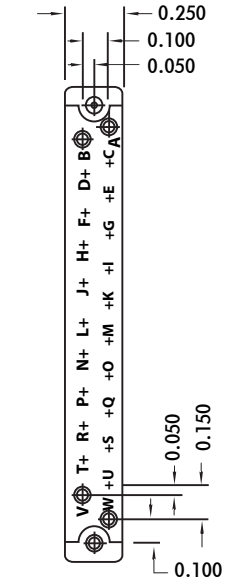

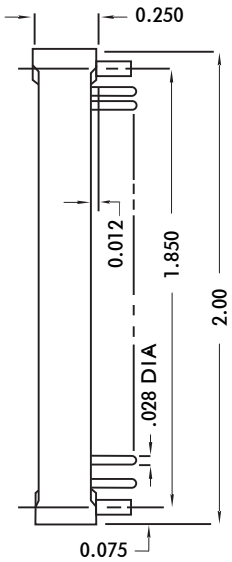

RECEPTACLE

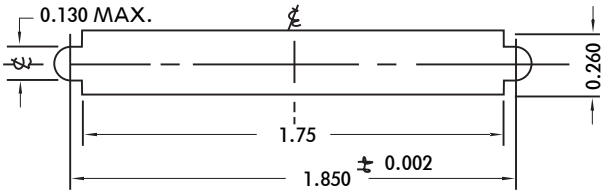

LATERAL FLOAT: .020 Max.
Recommended chassis cut-out
(Part No. AP 23S - 51HW)

FOR MECHANICAL AND ELECTRICAL SPECIFICATIONS SEE PAGE 03

DEP 7 SERIES

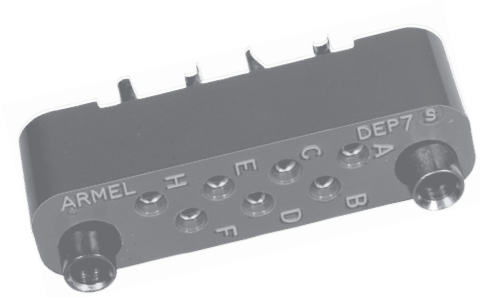

MOUNTING DATA								CONTACT DATA	
0.180, C, 109D.		0.180, B, NO. 4-40		NO. 4-40, A		DIMENSION	PANEL THICKNESS		
RIVET	C	STUD	B	GUIDE	A	X			
				DEP 7S - 411LV2	.25	—	.06	0.17 SOLDER CUP	OPEN ENTRY
				DEP 7S - 415LV2	.31	—	.09		
				DEP 7S - 415LV2	.31	—	.12		
				DEP 7S - 412LV2	.25	—	.06	0.22 TURRET	
				DEP 7S - 416LV2	.31	—	.09		
				DEP 7S - 416LV2	.31	—	.12		
				DEP 7S - 413LV2	.25	—	.06	0.23 EYELET	
				DEP 7S - 417LV2	.31	—	.09		
				DEP 7S - 417LV2	.31	—	.12		
				DEP 7S - 414LV2	.25	.11	.06	X STRAIGHT PIN	
				DEP 7S - 418LV2	.31	.19	.09		
				DEP 7S - 418LV2	.31	.19	.12		
				DEP 7S - 423LV2	.25	.79	.06	0.045 SQ X WIRE WRAP	
				DEP 7S - 428LV2	.31	.79	.09		
				DEP 7S - 428LV2	.31	.79	.12		
				DEP 7K - 411LV2	.25	—	.06	0.17 SOLDER CUP	CLOSED ENTRY
				DEP 7K - 415LV2	.31	—	.09		
				DEP 7K - 415LV2	.31	—	.12		
				DEP 7K - 413LV2	.25	—	.06	0.23 EYELET	
				DEP 7K - 417LV2	.31	—	.09		
				DEP 7K - 417LV2	.31	—	.12		
				DEP 7K - 414LV2	.25	.19	.06	X STRAIGHT PIN	
				DEP 7K - 414LV2	.31	.19	.09		
				DEP 7K - 414LV2	.31	.19	.12		
				DEP 7K - 433LV2	.25	.60	.06	0.025 SQ X WIRE WRAP	
				DEP 7K - 438LV2	.31	.60	.09		
				DEP 7K - 438LV2	.31	.60	.12		
							.06	X RIGHT ANGLE	
							.09		
							.12		

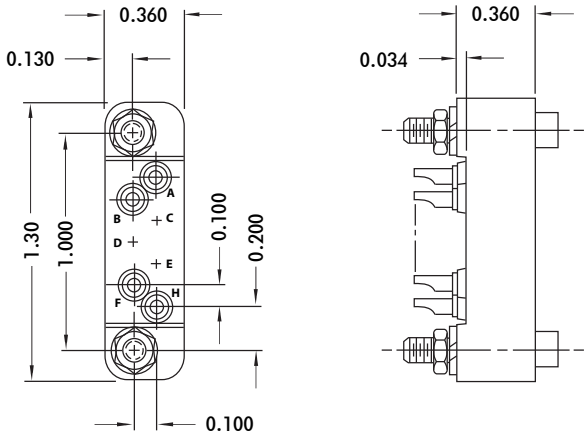

RECEPTACLE

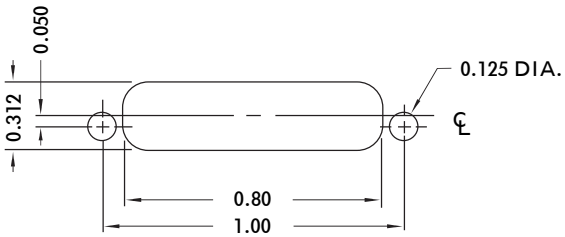

RECOMMENDED CHASSIS CUT-OUT
Mounting Hardware
Stainless Steel, Passivated

FOR MECHANICAL AND ELECTRICAL SPECIFICATIONS SEE PAGE 27

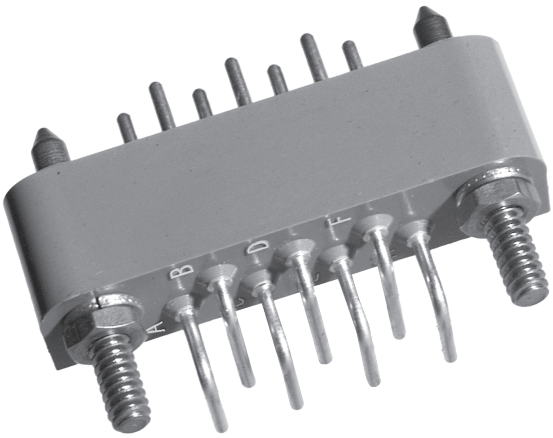

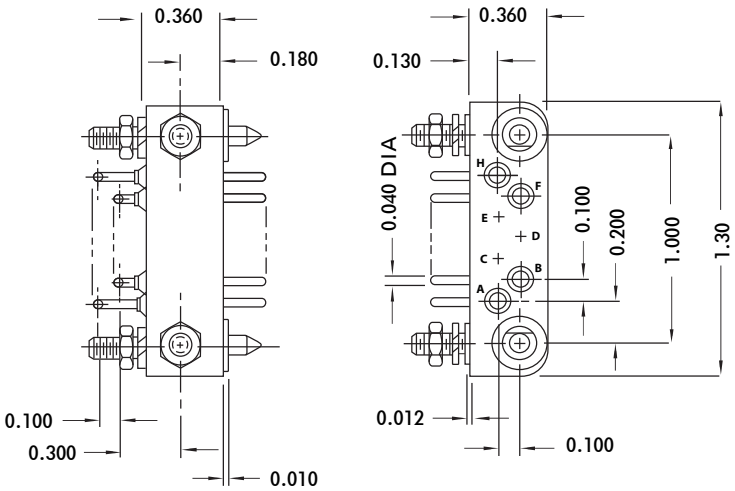

PLUG

CONTACT DATA		MOUNTING DATA							
		PANEL THICKNESS	DIMENSION	NO. 4-40 A		NO. 4-40 B		0.109D. C	
		X	A	GUIDE		B	STUD	C	RIVET
PLUG	RIGHT ANGLE	.06	.14			.22	DEP 7P-83LV2	.09	
		.09	.14			.25	DEP 7P-196LV2	.12	
		.12	.20			.31	DEP 7P-194LV2	.16	
	STRAIGHT	.06	.20	.25	DEP 7PC-31LV2				
		.09	.20	.25	DEP 7PC-32LV2				
		.12	.24	.25	DEP 7PC-33LV2				
	SOLDER-CUP	.06	—						
		.09	—						
		.12	—						

Mounting Hardware
Stainless Steel, Passivated

FOR MECHANICAL AND ELECTRICAL SPECIFICATIONS SEE PAGE 27

DEP 11 SERIES

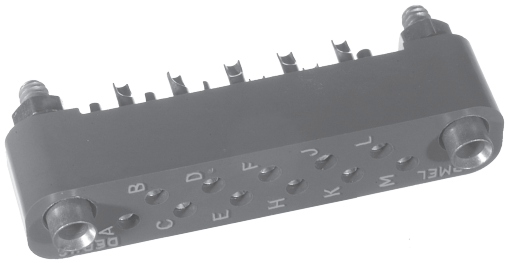

MOUNTING DATA								CONTACT DATA	
0.180 / 0.109D. / C		0.180 / NO.4-40 / B		NO.4-40 / A		DIMENSION	PANEL THICKNESS		
RIVET	C	STUD	B	GUIDE	A	X			
DEP 11S - 41JV2	.09	DEP 11S - 96JV2	.22	DEP 11S - 1JV2	.25	—	.06	0.17 SOLDER CUP	OPEN ENTRY
DEP 11S - 42JV2	.12	DEP 11S -85JV2	.25	DEP 11S - 5JV2	.33	—	.09		
DEP 11S - 43JV2	.16	DEP 11S -86JV2	.31	DEP 11S - 5JV2	.33	—	.12		
				DEP 11S - 2JV2	.25	—	.06	0.22 TURRET	
				DEP 11S - 6JV2	.33	—	.09		
				DEP 11S - 6JV2	.33	—	.12		
				DEP 11S - 3JV2	.25	—	.06	0.23 EYELET	
				DEP 11S - 7JV2	.33	—	.09		
				DEP 11S - 7JV2	.33	—	.12		
				DEP 11S - 34JV2	.25	.11	.06	X STRAIGHT PIN	
				DEP 11S - 8JV2	.33	.19	.09		
				DEP 11S - 8JV2	.33	.19	.12		
				DEP 11S - 13JV2	.25	.79	.06	0.045 SQ X WIRE WRAP	
				DEP 11S - 18JV2	.33	.79	.09		
				DEP 11S - 18JV2	.33	.79	.12		
DEP 11K - 41JV2	.09	DEP 11K - 96JV2	.22	DEP 11K - 1JV2	.25	—	.06	0.17 SOLDER CUP	CLOSED ENTRY
DEP 11K - 42JV2	.12	DEP 11K - 85JV2	.25	DEP 11K - 5JV2	.33	—	.09		
DEP 11K - 43JV2	.16	DEP 11K - 86JV2	.31	DEP 11K - 5JV2	.33	—	.12		
				DEP 11K - 3JV2	.25	—	.06	0.23 EYELET	
				DEP 11K - 7JV2	.33	—	.09		
				DEP 11K - 7JV2	.33	—	.12		
				DEP 11K - 4JV2	.33	.19	.06	X STRAIGHT PIN	
				DEP 11K - 8JV2	.33	.19	.09		
				DEP 11K - 8JV2	.33	.19	.12		
				DEP 11K - 433JV2	.25	.60	.06	0.025 SQ X WIRE WRAP	
				DEP 11K - 438JV2	.31	.60	.09		
				DEP 11K - 438JV2	.31	.60	.12		
		DEP 11K - 591JV2	.22	DEP 11K - 794JV2	.22	.15	.06	X RIGHT ANGLE	
		DEP 11K - 594JV2	.25	DEP 11K - 795JV2	.33	.15	.09		
		DEP 11K - 595JV2	.31	DEP 11K - 795JV2	.33	.15	.12		

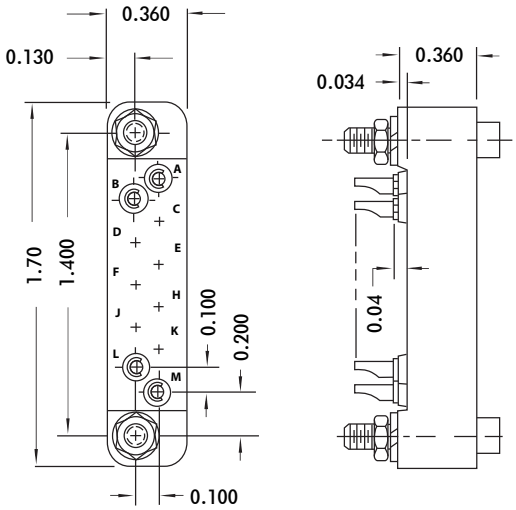

RECEPTACLE

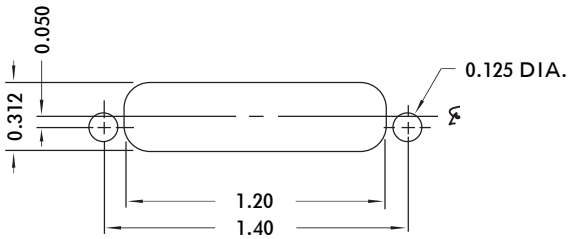

RECOMMENDED CHASSIS CUT-OUT

FOR MECHANICAL AND ELECTRICAL SPECIFICATIONS SEE PAGE 27

DEP 11 SERIES

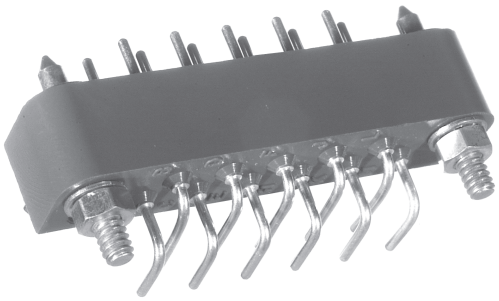

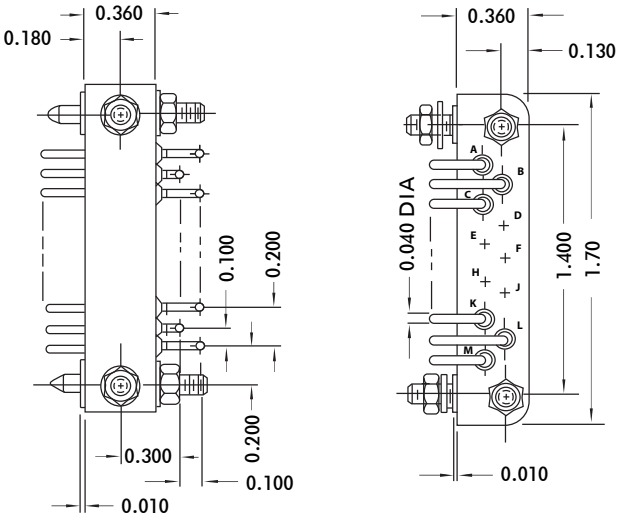

PLUG

CONTACT DATA		MOUNTING DATA							
		PANEL THICKNESS	DIMENSION	NO. 4-40 A		NO. 4-40 B		0.109D. C	
		X	A	GUIDE	B	STUD	C	RIVET	
PLUG	RIGHT ANGLE	.06	.14		.22	DEP 11P - 3JV2	.09	DEP 11P - 41JV2	
		.09	.14		.25	DEP 11P - 6JV2	.12	DEP 11P - 42JV2	
		.12	.20		.31	DEP 11P - 4JV2	.16	DEP 11P - 43JV2	
	STRAIGHT	.06	.20	.25	DEP 11P - 31JV2				
		.09	.20	.25	DEP 11P - 32JV2				
		.12	.24	.25	DEP 11P - 33JV2				
	SOLDER-CUP	.06	—	.25	DEP 11P - 91JV2	.22	DEP 11P - 96JV2		
		.09	—	.25	DEP 11P - 91JV2	.25	DEP 11P - 85JV2		
		.12	—	.25	DEP 11P - 91JV2	.31	DEP 11P - 86JV2		

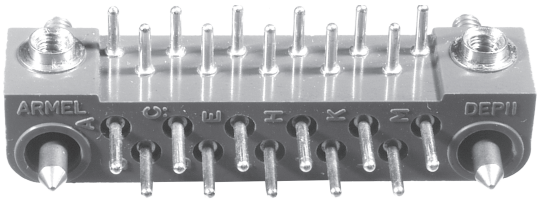

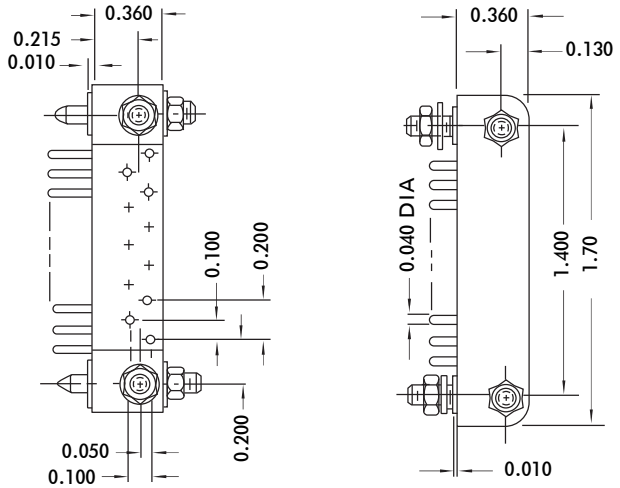

PLUG

CONTACT DATA		MOUNTING DATA							
		BOARD THICKNESS	DIMENSION	NO. 4-40 A		NO. 4-40 B		0.109D. C	
		X	A	INSERT	B	STUD	C	RIVET	
PLUG		.06	.09	.14	DEP 11M - 53JV2	.22	DEP 11M - 3JV2	.09	DEP 11M - 41JV2
		.09	.14	.14	DEP 11M - 519JV2	.25	DEP 11M - 19JV2	.12	DEP 11M - 42JV2
		.12	.16	.14	DEP 11M - 54JV2	.31	DEP 11M - 4JV2	.16	DEP 11M - 43JV2

FOR MECHANICAL AND ELECTRICAL SPECIFICATIONS SEE PAGE 27

DEP 15 SERIES

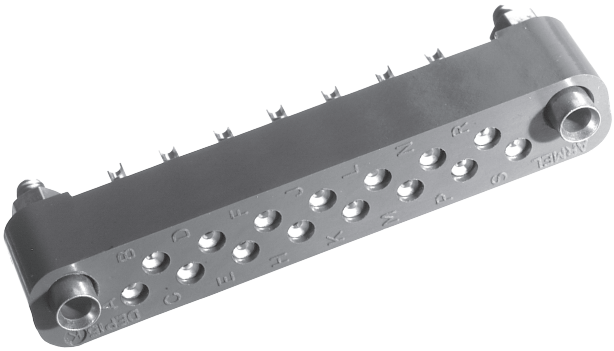

MOUNTING DATA								CONTACT DATA	
0.180, 109D., C		0.180, NO. 4-40, B		NO. 4-40, A		DIMENSION	PANEL THICKNESS		
RIVET	C	STUD	B	GUIDE	A	X			
DEP 15S - 41JV2	.09	DEP 15S - 96JV2	.22	DEP 15S - 1JV2	.25	—	.06	0.17 SOLDER CUP	OPEN ENTRY
DEP 15S - 42JV2	.12	DEP 15S - 85JV2	.25	DEP 15S - 5JV2	.33	—	.09		
DEP 15S - 43JV2	.16	DEP 15S - 86JV2	.31	DEP 15S - 5JV2	.33	—	.12		
				DEP 15S - 2JV2	.25	—	.06	0.22 TURRET	
				DEP 15S - 6JV2	.33	—	.09		
				DEP 15S - 6JV2	.33	—	.12		
				DEP 15S - 3JV2	.25	—	.06	0.23 EYELET	
				DEP 15S - 7JV2	.33	—	.09		
				DEP 15S - 7JV2	.33	—	.12		
				DEP 15S - 34JV2	.25	.11	.06	X STRAIGHT PIN	
				DEP 15S - 8JV2	.33	.19	.09		
				DEP 15S - 8JV2	.33	.19	.12		
				DEP 15S - 13JV2	.25	.79	.06	0.045 SQ, X WIRE WRAP	
				DEP 15S - 18JV2	.33	.79	.09		
				DEP 15S - 18JV2	.33	.79	.12		
DEP 15K - 41JV2	.09	DEP 15K - 96JV2	.22	DEP 15K - 1JV2	.25	—	.06	0.17 SOLDER CUP	CLOSED ENTRY
DEP 15K - 42JV2	.12	DEP 15K - 85JV2	.25	DEP 15K - 5JV2	.33	—	.09		
DEP 15K - 43JV2	.16	DEP 15K - 86JV2	.31	DEP 15K - 5JV2	.33	—	.12		
				DEP 15K - 3JV2	.25	—	.06	0.23 EYELET	
				DEP 15K - 7JV2	.33	—	.09		
				DEP 15K - 7JV2	.33	—	.12		
				DEP 15K - 4JV2	.33	.19	.06	X STRAIGHT PIN	
				DEP 15K - 8JV2	.33	.19	.09		
				DEP 15K - 8JV2	.33	.19	.12		
				DEP 15K - 433JV2	.25	.60	.06	0.025 SQ, X WIRE WRAP	
				DEP 15K - 438JV2	.31	.60	.09		
				DEP 15K - 438JV2	.31	.60	.12		
		DEP 15K - 591JV2	.22	DEP 15K - 794JV2	.22	.15	.06	X, T RIGHT ANGLE	
		DEP 15K - 594JV2	.25	DEP 15K - 795JV2	.33	.15	.09		
		DEP 15K - 595JV2	.31	DEP 15K - 795JV2	.33	.15	.12		

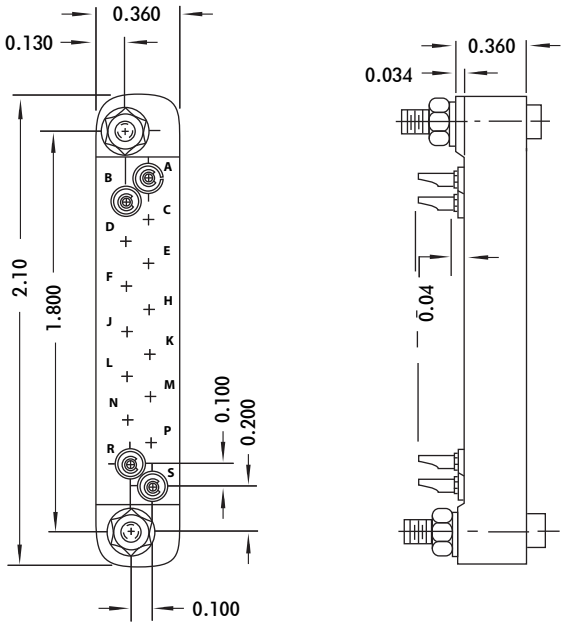

RECEPTACLE

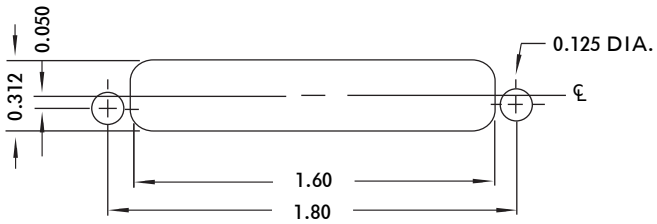

RECOMMENDED CHASSIS CUT-OUT

FOR MECHANICAL AND ELECTRICAL SPECIFICATIONS SEE PAGE 27

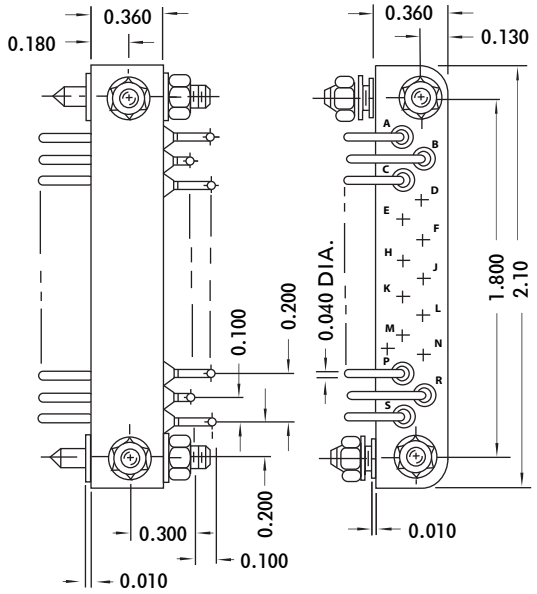

PLUG

CONTACT DATA		MOUNTING DATA							
		PANEL THICKNESS	DIMENSION	NO. 4-40 A		NO. 4-40 B		0.109D. C	
		X	A	GUIDE		B	STUD	C	RIVET
PLUG	RIGHT ANGLE	.06	.14			.22	DEP 15P - 3JV2	.09	DEP 15P - 41JV2
		.09	.14			.25	DEP 15P - 6JV2	.12	DEP 15P - 42JV2
		.12	.20			.31	DEP 15P - 4JV2	.16	DEP 15P - 43JV2
	STRAIGHT	.06	.20	.25	DEP 15P - 31JV2				
		.09	.20	.25	DEP 15P - 32JV2				
		.12	.24	.25	DEP 15P - 33JV2				
	SOLDER-CUP	.06	—	.25	DEP 15P - 91JV2	.22	DEP 15P - 96JV2		
		.09	—	.25	DEP 15P - 91JV2	.25	DEP 15P - 85JV2		
		.12	—	.25	DEP 15P - 91JV2	.31	DEP 15P - 86JV2		

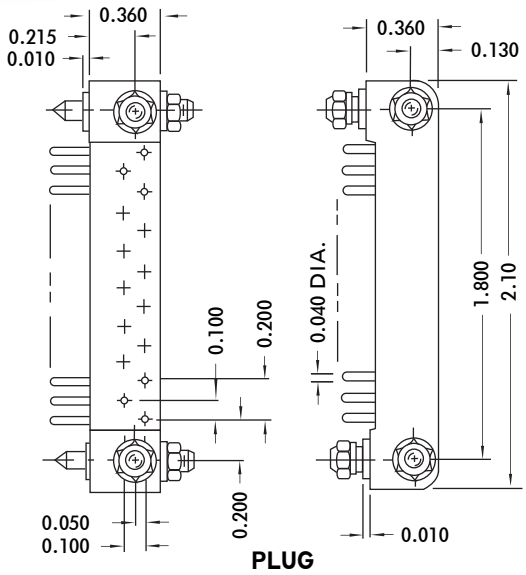

PLUG

CONTACT DATA		MOUNTING DATA							
		BOARD THICKNESS	DIMENSION	NO. 4-40 A		NO. 4-40 B		0.109D. C	
		X	A	INSERT		B	STUD	C	RIVET
PLUG		.06	.09	.14	DEP 15M - 53JV2	.22	DEP 15M - 3JV2	.09	DEP 15M - 41JV2
		.09	.14	.14	DEP 15M - 519JV2	.25	DEP 15M - 19JV2	.12	DEP 15M - 42JV2
		.12	.16	.14	DEP 15M - 54JV2	.31	DEP 15M - 4JV2	.16	DEP 15M - 43JV2

FOR MECHANICAL AND ELECTRICAL SPECIFICATIONS SEE PAGE 27

DEP 23 SERIES

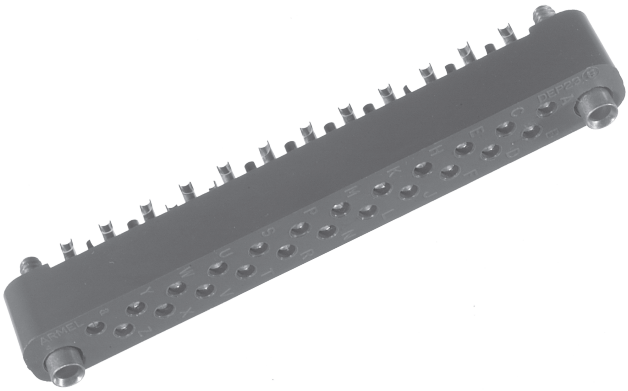

MOUNTING DATA								CONTACT DATA	
0.180 / 0.109D. / C		0.180 / NO. 4-40 / B		NO. 4-40 / A		DIMENSION	PANEL THICKNESS		
RIVET	C	STUD	B	GUIDE	A	X			
DEP 23S - 41JV2	.09	DEP 23S - 96JV2	.22	DEP 23S - 1JV2	.25	—	.06	0.17 SOLDER CUP	OPEN ENTRY
DEP 23S - 42JV2	.12	DEP 23S - 85JV2	.25	DEP 23S - 5JV2	.33	—	.09		
DEP 23S - 43JV2	.16	DEP 23S - 86JV2	.31	DEP 23S - 5JV2	.33	—	.12		
				DEP 23S - 2JV2	.25	—	.06	0.22 TURRET	
				DEP 23S - 6JV2	.33	—	.09		
				DEP 23S - 6JV2	.33	—	.12		
				DEP 23S - 3JV2	.25	—	.06	0.23 EYELET	
				DEP 23S - 7JV2	.33	—	.09		
				DEP 23S - 7JV2	.33	—	.12		
				DEP 23S - 34JV2	.25	.11	.06	X STRAIGHT PIN	
				DEP 23S - 8JV2	.33	.19	.09		
				DEP 23S - 8JV2	.33	.19	.12		
				DEP 23S - 13JV2	.25	.79	.06	0.045 SQ X WIRE WRAP	
				DEP 23S - 18JV2	.33	.79	.09		
				DEP 23S - 18JV2	.33	.79	.12		
DEP 23K - 41JV2	.09	DEP 23K - 96JV2	.22	DEP 23K - 1JV2	.25	—	.06	0.17 SOLDER CUP	CLOSED ENTRY
DEP 23K - 42JV2	.12	DEP 23K - 85JV2	.25	DEP 23K - 5JV2	.33	—	.09		
DEP 23K - 43JV2	.16	DEP 23K - 86JV2	.31	DEP 23K - 5JV2	.33	—	.12		
				DEP 23K - 3JV2	.25	—	.06	0.23 EYELET	
				DEP 23K - 7JV2	.33	—	.09		
				DEP 23K - 7JV2	.33	—	.12		
				DEP 23K - 4JV2	.33	—	.06	X STRAIGHT PIN	
				DEP 23K - 8JV2	.33	—	.09		
				DEP 23K - 8JV2	.33	—	.12		
				DEP 23K - 433JV2	.25	.60	.06	0.025 SQ X WIRE WRAP	
				DEP 23K - 438JV2	.31	.60	.09		
				DEP 23K - 438JV2	.31	.60	.12		
		DEP 23K - 591JV2	.22	DEP 23K - 794JV2	.22	.15	.06	X RIGHT ANGLE	
		DEP 23K - 594JV2	.25	DEP 23K - 795JV2	.33	.15	.09		
		DEP 23K - 595JV2	.31	DEP 23K - 795JV2	.33	.15	.12		

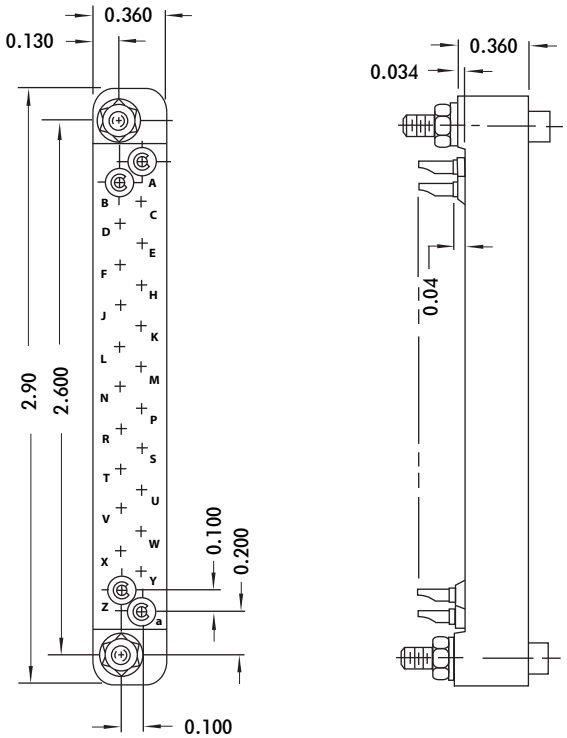

RECEPTACLE

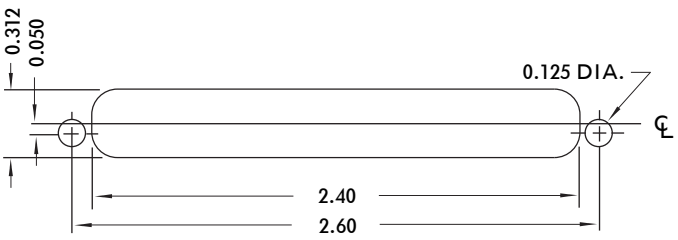

RECOMMENDED CHASSIS CUT-OUT

FOR MECHANICAL AND ELECTRICAL SPECIFICATIONS SEE PAGE 27

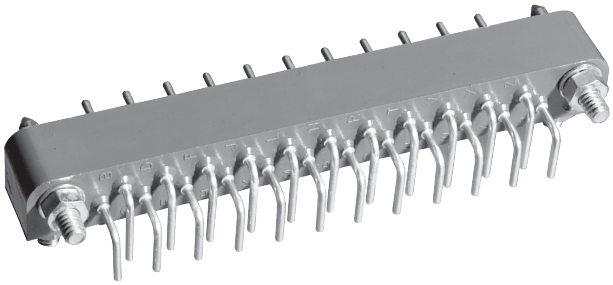

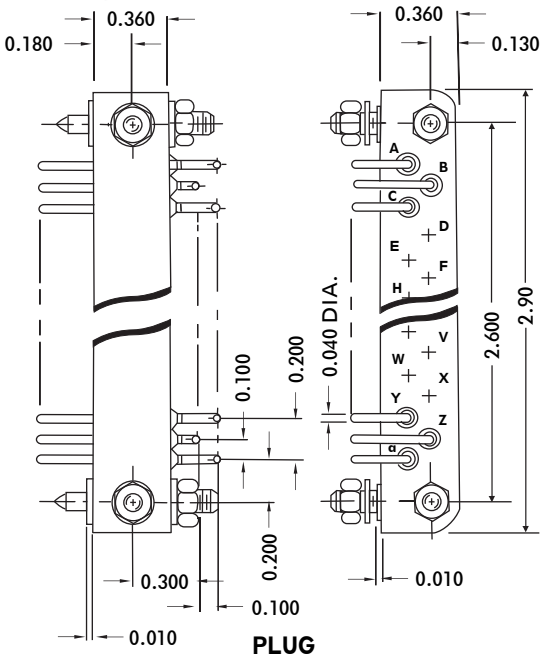

PLUG

CONTACT DATA		MOUNTING DATA							
		PANEL THICKNESS	DIMENSION	NO. 4-40 A		NO. 4-40 B		0.109D. C	
		X	A	GUIDE		B	STUD	C	RIVET
PLUG	RIGHT ANGLE	.06	.14			.22	DEP 23P - 3JV2	.09	DEP 23P - 41JV2
		.09	.14			.25	DEP 23P - 6JV2	.12	DEP 23P - 42JV2
		.12	.20			.31	DEP 23P - 4JV2	.16	DEP 23P - 43JV2
	STRAIGHT	.06	.20	.25	DEP 23P - 31JV2				
		.09	.20	.25	DEP 23P - 32JV2				
		.12	.24	.25	DEP 23P - 33JV2				
	SOLDER-CUP	.06	—	.25	DEP 23P - 91JV2	.22	DEP 23P - 96JV2		
		.09	—	.25	DEP 23P - 91JV2	.25	DEP 23P - 85JV2		
		.12	—	.25	DEP 23P - 91JV2	.31	DEP 23P - 86JV2		

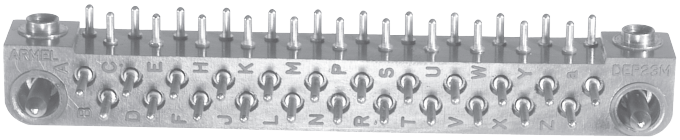

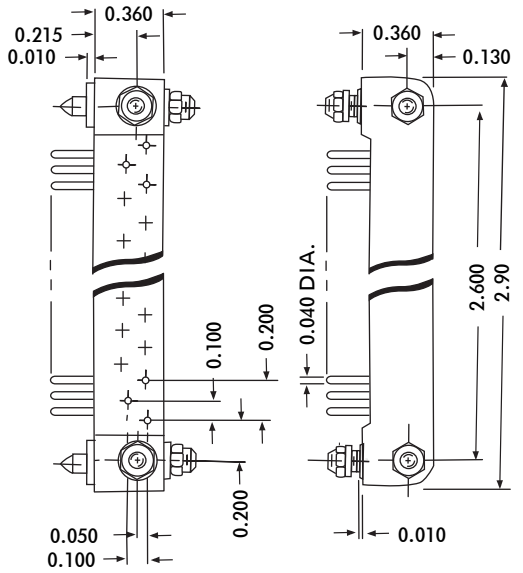

PLUG

CONTACT DATA		MOUNTING DATA							
		BOARD THICKNESS	DIMENSION	NO. 4-40 A		NO. 4-40 B		0.109D. C	
		X	A	INSERT		B	STUD	C	RIVET
PLUG		.06	.09	.14	DEP 23M - 53JV2	.22	DEP 23M - 3JV2	.09	DEP 23M - 41JV2
		.09	.14	.14	DEP 23M - 519JV2	.25	DEP 23M - 19JV2	.12	DEP 23M - 42JV2
		.12	.16	.14	DEP 23M - 54JV2	.31	DEP 23M - 4JV2	.16	DEP 23M - 43JV2

FOR MECHANICAL AND ELECTRICAL SPECIFICATIONS SEE PAGE 27

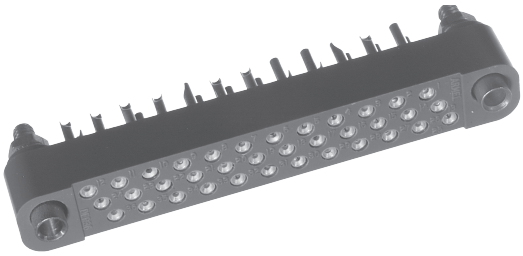

MOUNTING DATA								CONTACT DATA	
0.109D. C		NO. 4-40 B		NO. 4-40 A		DIMENSION	PANEL THICKNESS		
RIVET	C	STUD	B	GUIDE	A	X			
				DEP 36K - 301JV2	.25	.18	.06	SOLDER CUP	CLOSED ENTRY
				DEP 36K - 141JV2	.31	.18	.09		
				DEP 36K - 141JV2	.31	.18	.12		
				DEP 36K - 48JV2	.25	.27	.06	STRAIGHT PIN	
				DEP 36K - 8JV2	.31	.27	.09		
				DEP 36K - 8JV2	.31	.27	.12		
				DEP 36K - 433JV2	.25	.57	.06	.025 SQ WIRE WRAP	
				DEP 36K - 438JV2	.25	.57	.09		
				DEP 36K - 438JV2	.25	.57	.12		
				DEP 36K - 122JV2	.25	—	.06	.20 TURRET	
				DEP 36K - 222JV2	.31	—	.09		
				DEP 36K - 222JV2	.31	—	.12		

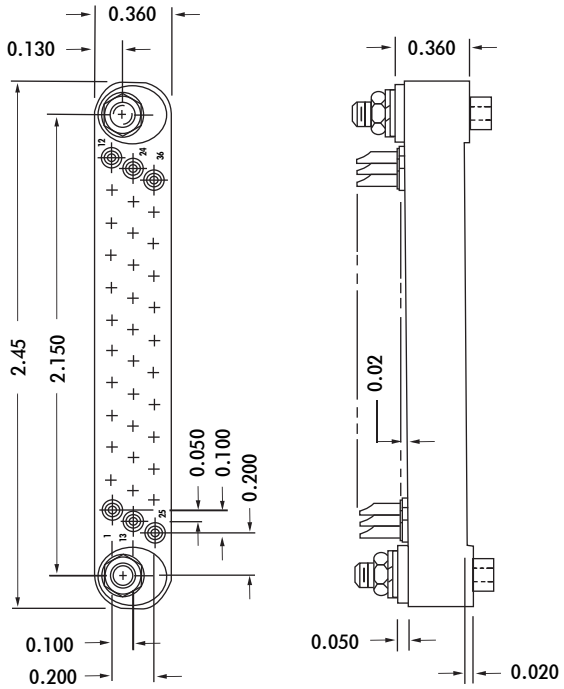

RECEPTACLE

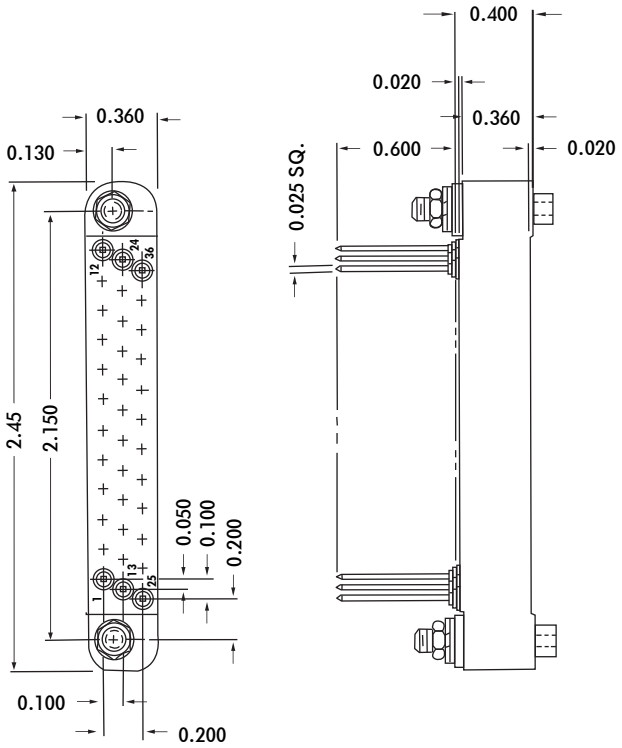

DEP 36WK-9101JV2
RECEPTACLE

FOR MECHANICAL AND ELECTRICAL SPECIFICATIONS SEE PAGE 14

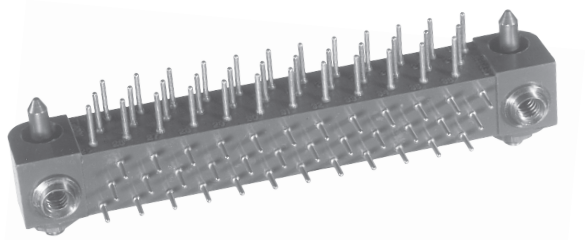

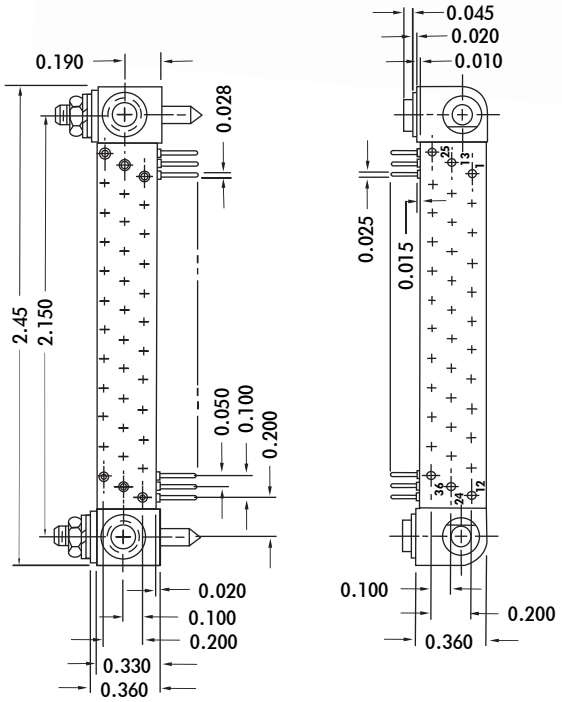

PLUG

CONTACT DATA		MOUNTING DATA							
		BOARD THICKNESS	DIMENSION						
				NO. 4-40 (A)		NO. 4-40 (B)		0.109D. (C)	
			X	A	INSERT	B	STUD	C	RIVET
PLUG	X	.06	.11	.14	DEP36M-653JV2				
		.09							
		.12							

SPECIFICATIONS

ELECTRICAL

Current Rating . . . . . 5 Amperes
Solder Cup Accomodation . . . . . One #24 A.W.G. Wire
Dielectric Withstanding Voltage
Contact to Contact Sea Level . . . . . 1000 Volts RMS Minimum
Contact to Contact 70,000 Feet . . . . . 300 Volts RMS Minimum

MECHANICAL

Contact Diameter . . . . . 0.028 inch
Creepage Between Contacts . . . . . 0.06 inch Minimum
Air Space Between Contacts . . . . . 0.06 inch Minimum
Polarization . . . . . Guide pins and contact arrangement
Keying Guide Pins available (See Page 29)
Socket Contacts . . . . . Spring Tempered, Phosphor Bronze, Gold Plated (0.00005 inch) per MIL-G-45204, Type II, Class 1 over Copper Plate (Other platings also available)
Pin Contacts . . . . . Phosphor Bronze, Gold Plated (0.00005 inch) per MIL-G-45204, Type II Class 1 over Copper Plate (OTHER PLATINGS ALSO AVAILABLE)
Guide Pins, Sockets and Hardware . . Stainless Steel, passivated
Mounting Studs and Hardware . . . . . Stainless Steel, passivated
Insulation Material . . . . . Diallyl Phthalate, Glass filled per MIL-M-14, Type GDI-30F
Temperature Range . . . . . -65? C to + 125? C

DEP 37 SERIES

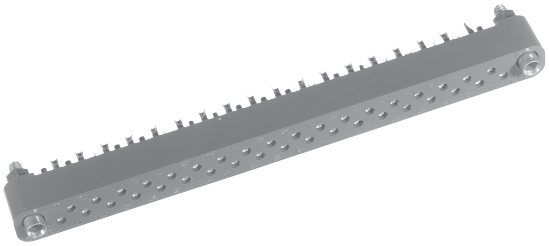

MOUNTING DATA									CONTACT DATA	
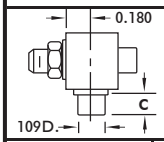		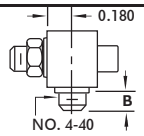		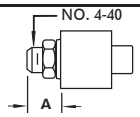			DIMENSION	PANEL THICKNESS		
RIVET	C	STUD	B	GUIDE	A	X				
DEP 37S - 41JV2	.09	DEP 37S - 96JV2	.22	DEP 37S - 1JV2	.25	—		.06	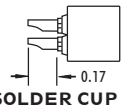 SOLDER CUP	OPEN ENTRY
DEP 37S - 42JV2	.12	DEP 37S - 85JV2	.25	DEP 37S - 5JV2	.33	—		.09		
DEP 37S - 43JV2	.16	DEP 37S - 86JV2	.31	DEP 37S - 5JV2	.33	—		.12		
									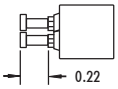 TURRET	
				DEP 37S - 2JV2	.25	—		.06		
				DEP 37S - 6JV2	.33	—		.09		
				DEP 37S - 6JV2	.33	—		.12		
									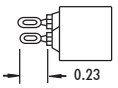 EYELET	
				DEP 37S - 3JV2	.25	—		.06		
				DEP 37S - 7JV2	.33	—		.09		
				DEP 37S - 7JV2	.33	—		.12		
									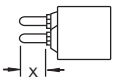 STRAIGHT PIN	
				DEP 37S - 34JV2	.25	.11		.06		
				DEP 37S - 8JV2	.33	.19		.09		
				DEP 37S - 8JV2	.33	.19		.12		
									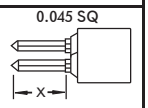 WIRE WRAP	
				DEP 37S - 13JV2	.25	.79		.06		
				DEP 37S - 18JV2	.33	.79		.09		
				DEP 37S - 18JV2	.33	.79		.12		
									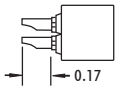 SOLDER CUP	CLOSED ENTRY
DEP 37K - 41JV2	.09	DEP 37K - 96JV2	.22	DEP 37K - 1JV2	.25	—		.06		
DEP 37K - 42JV2	.12	DEP 37K - 85JV2	.25	DEP 37K - 5JV2	.33	—		.09		
DEP 37K - 43JV2	.16	DEP 37K - 86JV2	.31	DEP 37K - 5JV2	.33	—		.12		
									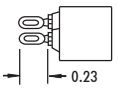 EYELET	
				DEP 37K - 3JV2	.25	—		.06		
				DEP 37K - 7JV2	.33	—		.09		
				DEP 37K - 7JV2	.33	—		.12		
									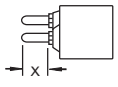 STRAIGHT PIN	
				DEP 37K-134JT3	.34	.32		.17		
				DEP 37K - 4JV2	.33	.19		.06		
				DEP 37K - 8JV2	.33	.19		.09		
				DEP 37K - 8JV2	.33	.19		.12		
									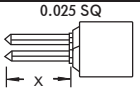 WIRE WRAP	
				DEP 37K - 433JV2	.25	.60		.06		
				DEP 37K - 438JV2	.31	.60		.09		
				DEP 37K - 438JV2	.31	.60		.12		
									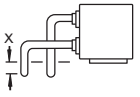 RIGHT ANGLE	
		DEP 37K - 591JV2	.22	DEP 37K - 794JV2	.22	.15		.06		
		DEP 37K - 594JV2	.25	DEP 37K - 795JV2	.33	.15		.09		
		DEP 37K - 595JV2	.31	DEP 37K - 795JV2	.33	.15		.12		

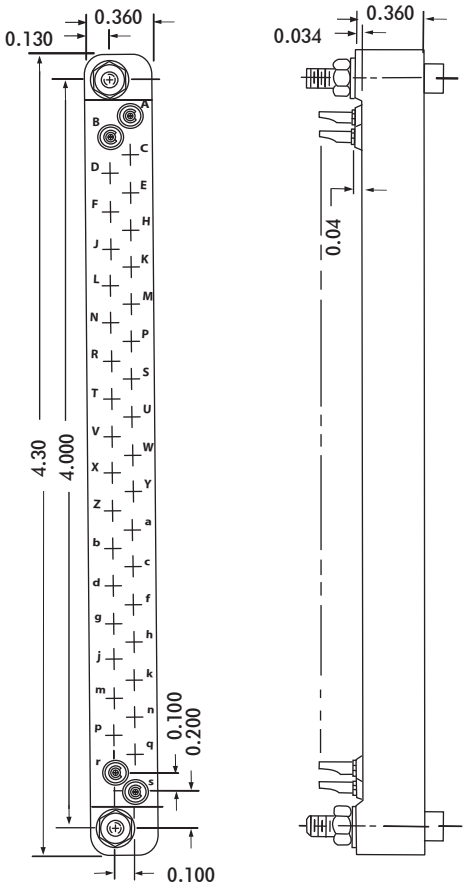

RECEPTACLE

RECOMMENDED CHASSIS CUT-OUT

FOR MECHANICAL AND ELECTRICAL SPECIFICATIONS SEE PAGE 27

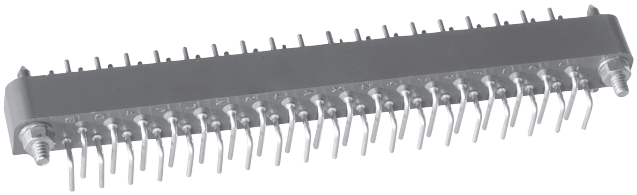

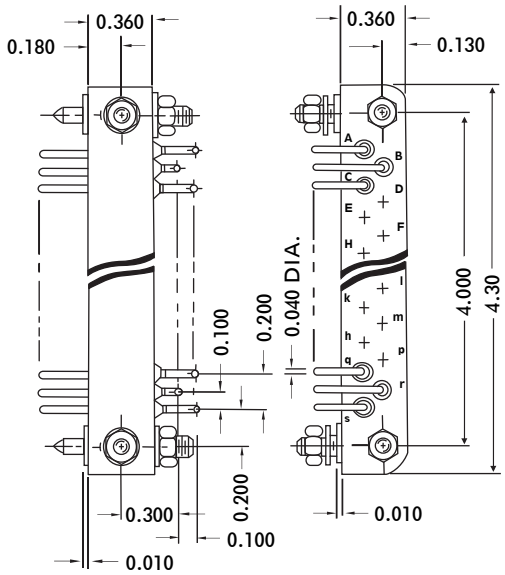

PLUG

CONTACT DATA		MOUNTING DATA							
		PANEL THICKNESS	DIMENSION						
			X	A	GUIDE	B	STUD	C	RIVET
PLUG	RIGHT ANGLE	.06	.14			.22	DEP 37P - 3JV2	.09	DEP 37P - 41JV2
		.09	.14			.25	DEP 37P - 6JV2	.12	DEP 37P - 42JV2
		.12	.20			.31	DEP 37P - 4JV2	.16	DEP 37P - 43JV2
	STRAIGHT	.06	.20	.25	DEP 37P - 31JV2				
		.09	.20	.25	DEP 37P - 32JV2				
		.12	.24	.25	DEP 37P - 33JV2				
	SOLDER-CUP	.06	—	.25	DEP 37P - 91JV2	.22	DEP 37P - 96JV2		
		.09	—	.25	DEP 37P - 91JV2	.25	DEP 37P - 85JV2		
		.12	—	.25	DEP 37P - 91JV2	.31	DEP 37P - 86JV2		

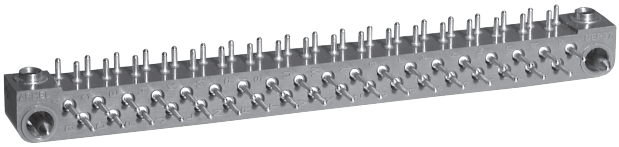

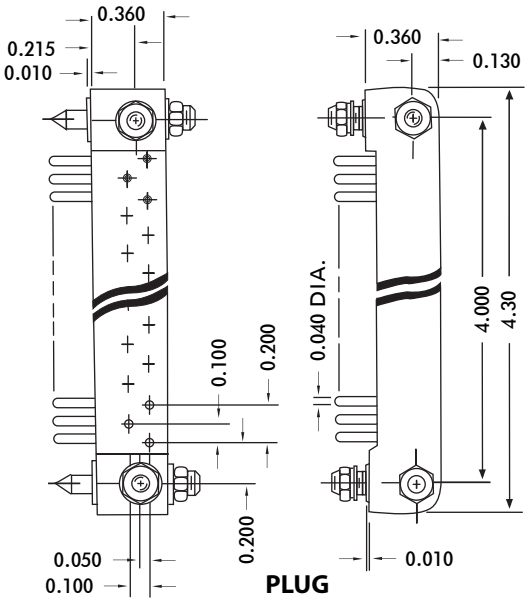

PLUG

CONTACT DATA		MOUNTING DATA							
		BOARD THICKNESS	DIMENSION						
			X	A	INSERT	B	STUD	C	RIVET
PLUG		.06	.09	.14	DEP 37M - 53JV2	.22	DEP 37M - 3JV2	.09	DEP 37M - 41JV2
		.09	.14	.14	DEP 37M - 519JV2	.25	DEP 37M - 19JV2	.12	DEP 37M - 42JV2
		.12	.16	.14	DEP 37M - 54JV2	.31	DEP 37M - 4JV2	.16	DEP 37M - 43JV2

FOR MECHANICAL AND ELECTRICAL SPECIFICATIONS SEE PAGE 27

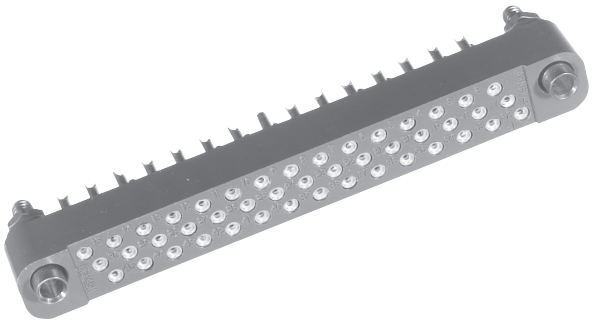

MOUNTING DATA								CONTACT DATA	
0.109D. C		NO. 4-40 B		A		DIMENSION	PANEL THICKNESS		
RIVET	C	STUD	B	GUIDE	A	X			
				DEP 45K-1JV2	.25	.18	.06	SOLDER CUP	CLOSED ENTRY
				DEP 45K-141JV2	.31	.18	.09		
				DEP 45K-141JV2	.31	.18	.12		
								STRAIGHT PIN	
				DEP 45K-4JV2	.25	.27	.06		
				DEP 45K-8JV2	.31	.27	.09		
				DEP 45K-8JV2	.31	.27	.12		
								RIGHT ANGLE	
		DEP 45K-593JV2	.22			.11	.06		
							.09		
							.12		
								TURRET	
				DEP 45K-122JV2	.25	—	.06		
				DEP 45K-222JV2	.31	—	.09		
				DEP 45K-222JV2	.31	—	.12		
								WIRE WRAP	
				DEP 45K-433JV2	.25	.57	.06		
				DEP 45K-438JV2	.31	.57	.09		
				DEP 45K-438JV2	.31	.57	.12		

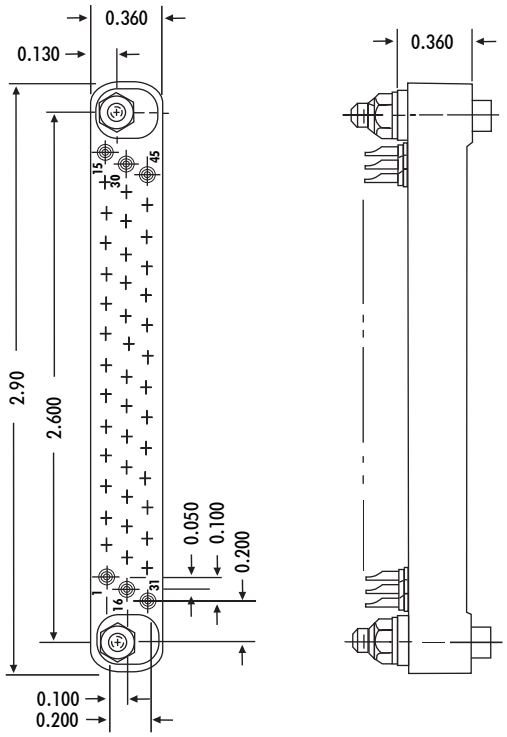

RECEPTACLE

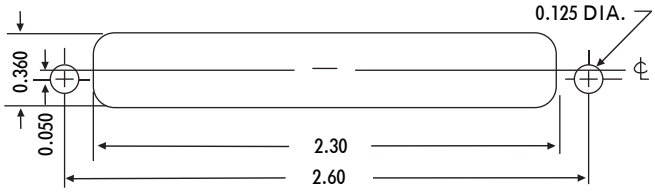

RECOMMENDED CHASSIS CUT-OUT

FOR MECHANICAL AND ELECTRICAL SPECIFICATIONS SEE PAGE 18

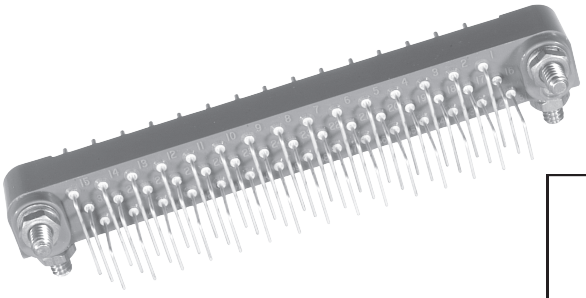

CONTACT DATA		MOUNTING DATA									
		PANEL THICKNESS	DIMENSION								
			X	A	GUIDE	B	STUD	C	RIVET	D	INSERT
PLUG	RIGHT ANGLE	.06	.13			.22	DEP 45P - 3JV2	.09	DEP 45P - 41JV2	.14	DEP 45P - 53JV2
		.09	.13			.25	DEP 45P - 6JV2	.12	DEP 45P - 42JV2	.14	DEP 45P - 53JV2
		.12	.18			.31	DEP 45P - 107JV2	.16	DEP 45P - 43JV2	.14	DEP 45P - 57JV2
	STRAIGHT	.06									
		.09									
		.12	.38	.31	DEP 45P - 914JV2						
	SOLDER CUP	.06									
		.09									
		.12									

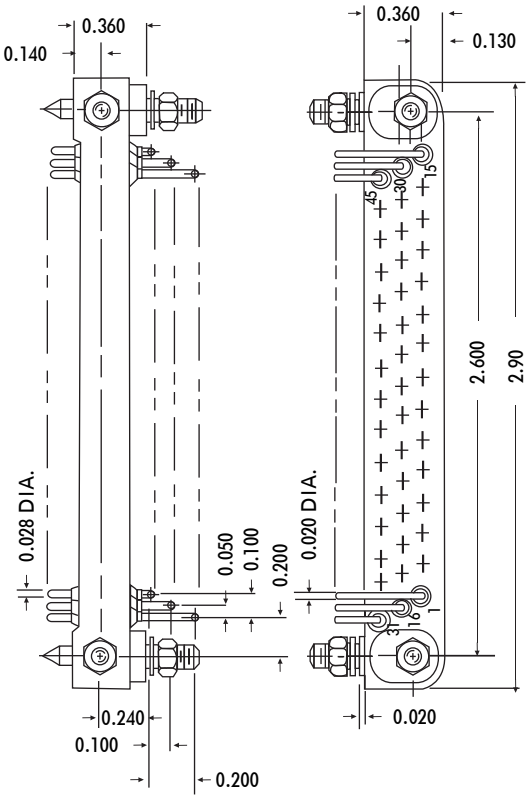

PLUG

SPECIFICATIONS

ELECTRICAL

Current Rating	5 amperes
Solder Cup Accomodation	One #24 A.W.G. Wire
Dielectric Withstanding Voltage	
Contact to Contact Sea Level	1000 Volts RMS Minimum
Contact to Contact 70,000 Feet	300 Volts RMS Minimum

MECHANICAL

Contact Diameter	0.028 inch
Creepage Between Contacts	0.06 inch Minimum
Air Space Between Contacts	0.06 inch Minimum
Polarization	Guide pins and contact arrangement Keying Guide Pins Available (See Page 29)
Socket Contacts	Spring Tempered, Phosphor Bronze, Gold Plated (0.00005 inch) per MIL-G-45204, Type II, Class 1 over Copper Plate
Pin Contacts	Phosphor Bronze, Gold Plated (0.00005 inch) per MIL-G-45204, Type II Class 1 over Copper Plate
Guide Pins, Sockets and Hardware	Stainless Steel, passivated
Mounting Studs and Hardware	Stainless Steel, passivated
Rivets	Brass, Hot Tin Dipped
Shell (See Page PC-21)	Die Cast Aluminum, Cadmium Plated With Supplementary Chromate Finish
Floating Eyelets (PC-21)	Stainless Steel, Passivated
Insulation Material	Diallyl Phthalate, Glass filled per MIL-M-14, Type GDI-30F
Temperature Range	-65? C to + 125? C

APPROXIMATE WEIGHT

DEP45 (pin)	1 oz.
DEP45 (socket)	1 oz.

DEP 15 SHELLS

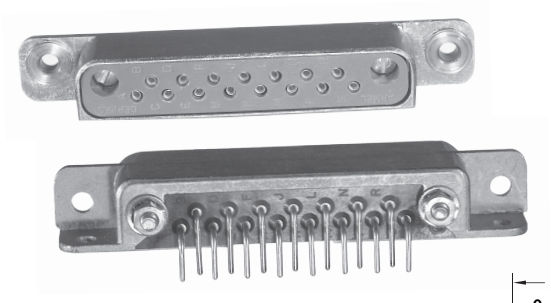

MOUNTING DATA					CONTACT DATA	
"A" DIA. .21	"A" DIA. .16	"A" DIA. .12	X (DIMENSION)	PANEL THICKNESS		
DEP15PHA-3JV2	DEP15PHA-2JV2	DEP15PHA-1JV2	.15	.06	RIGHT ANGLE	PLUG
DEP15PHA-3JV2	DEP15PHA-2JV2	DEP15PHA-1JV2	.15	.09		
DEP15PHA-6JV2	DEP15PHA-5JV2	DEP15PHA-4JV2	.21	.12		
DEP15PHA-23JV2	DEP15PHA-22JV2	DEP15PHA-21JV2	.07	—	STRAIGHT	
DEP15PHA-26JV2	DEP15PHA-25JV2	DEP15PHA-24JV2	.17	—		
DEP15PHA-29JV2	DEP15PHA-28JV2	DEP15PHA-27JV2	.21	—		
DEP15PHA-94JV2	DEP15PHA-93JV2	DEP15PHA-92JV2	.16	—	SOLDER CUP	
DEP15PHA-94JV2	DEP15PHA-93JV2	DEP15PHA-92JV2	.16	—		
DEP15PHA-94JV2	DEP15PHA-93JV2	DEP15PHA-92JV2	.16	—		

MOUNTING DATA			CONTACT DATA		
		X (DIMENSION)			
DEP15SHSA-1JV2	DEP15SHA-1JV2	.11	SOLDER CUP	OPEN ENTRY	RECEPTACLE
DEP15SHSA-3JV2	DEP15SHA-3JV2	.17	EYELET		
DEP15SHSA-4JV2	DEP15SHA-4JV2	.14	STRAIGHT		
DEP15SHSA-28JV2	DEP15SHA-28JV2	.17			
DEP15SHSA-13JV2	DEP15SHA-13JV2	.72	0.045 SQ. WIRE WRAP		
DEP15KHSA-1JV2	DEP15KHA-1JV2	.11	SOLDER CUP	CLOSED ENTRY	RECEPTACLE
DEP15KHSA-3JV2	DEP15KHA-3JV2	.17	EYELET		
DEP15KHSA-4JV2	DEP15KHA-4JV2	.14	STRAIGHT		

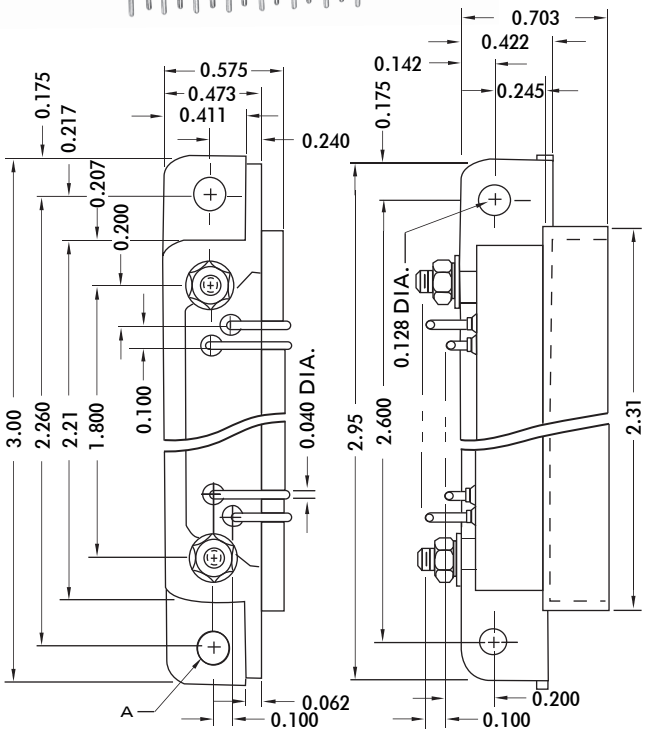

PLUG

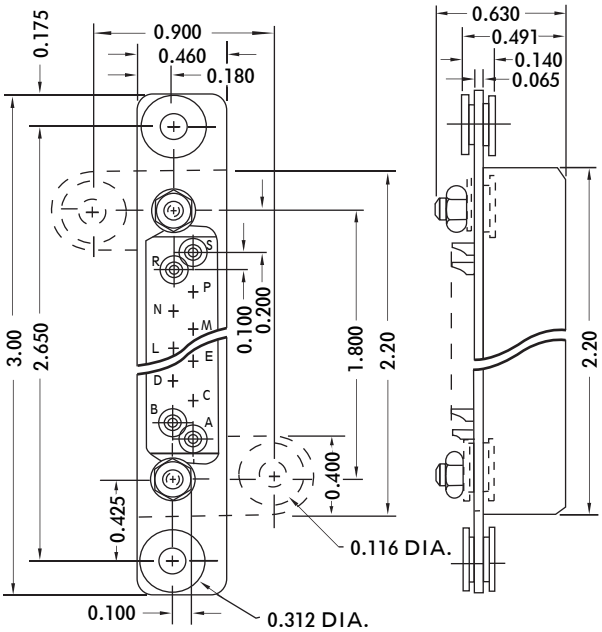

RECEPTACLE

FOR MECHANICAL AND ELECTRICAL SPECIFICATIONS SEE PAGE 27

DEP 23 SHELLS

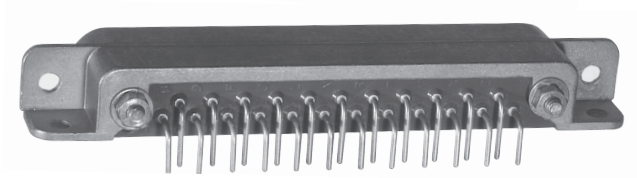

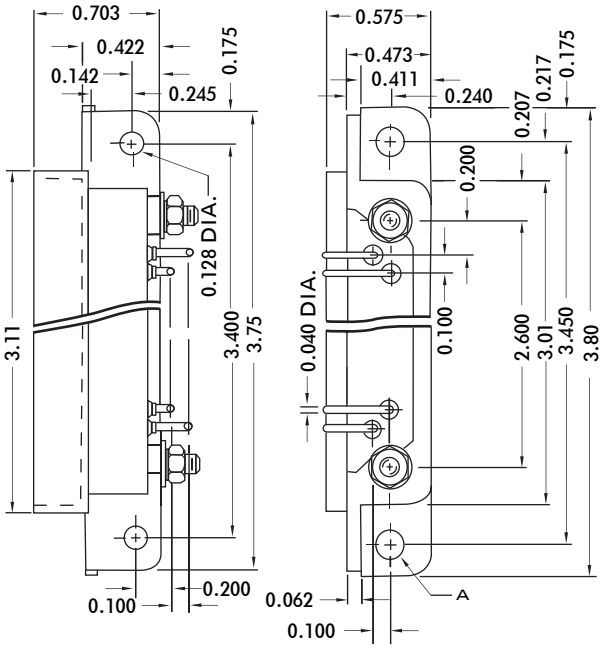

PLUG

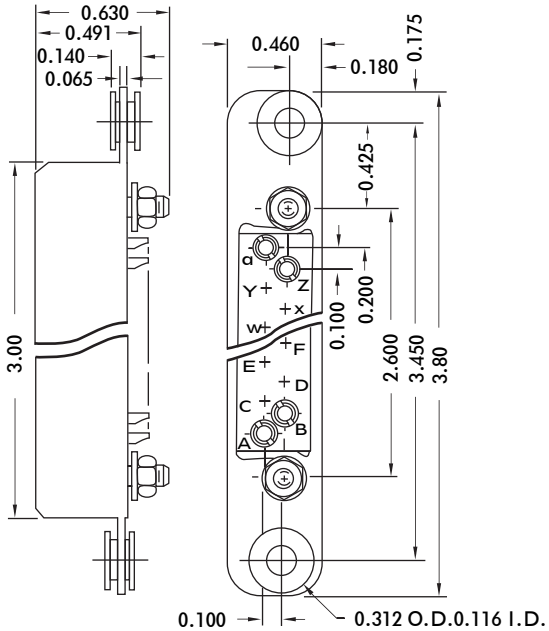

RECEPTACLE

CONTACT DATA		MOUNTING DATA				
		PANEL THICKNESS	DIMENSION X	"A" DIA. .12	"A" DIA. .16	"A" DIA. .21
PLUG	RIGHT ANGLE	.06	.15	DEP23PHA-1JV2	DEP23PHA-2JV2	
		.09	.15	DEP23PHA-1JV2	DEP23PHA-2JV2	
		.12	.21	DEP23PHA-4JV2		
	STRAIGHT	—	.07	DEP23PHA-21JV2	DEP23PHA-22JV2	
		—	.17	DEP23PHA-24JV2	DEP23PHA-25JV2	
		—	.21	DEP23PHA-27JV2	DEP23PHA-28JV2	
	SOLDER CUP	—	.16	DEP23PHA-92JV2	DEP23PHA-93JV2	
		—	.16	DEP23PHA-92JV2	DEP23PHA-93JV2	
		—	.16	DEP23PHA-92JV2	DEP23PHA-93JV2	

CONTACT DATA		MOUNTING DATA		
		DIMENSION X	OPEN ENTRY CONTACT	CLOSED ENTRY CONTACT
RECEPTACLE	SOLDER CUP	.11	DEP23SHA-1JV2	DEP23KHA-1JV2
	TURRET	.17	DEP23SHA-2JV2	
	EYELET	.17	DEP23SHA-3JV2	DEP23KHA-3JV2
	STRAIGHT	.14	DEP23SHA-4JV2	DEP23KHA-8JV2
		.17	DEP23SHA-28JV2	
	WIRE WRAP (0.045 SQ.)	.72	DEP23SHA-13JV2	

FOR MECHANICAL AND ELECTRICAL SPECIFICATIONS SEE PAGE 27

DEP 45 SHELLS

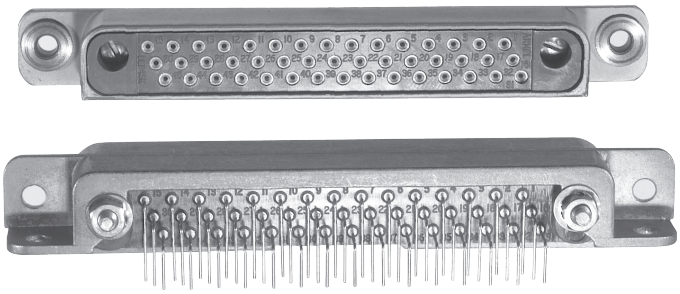

MOUNTING DATA					CONTACT DATA	
"A" DIA. .21	"A" DIA. .16	"A" DIA. .12	X (DIMENSION)	PANEL THICKNESS		
		DEP 45PHA -3JV2	.13	.06	RIGHT ANGLE	PLUG
		DEP 45PHA -3JV2	.13	.09		
		DEP 45PHA -7JV2	.20	.12		
					STRAIGHT	PLUG
					SOLDER CUP	PLUG

MOUNTING DATA			CONTACT DATA	
CLOSED ENTRY CONTACT	OPEN ENTRY CONTACT	X (DIMENSION)		
DEP 45KHA -91JV2		.11	SOLDER CUP	OPEN ENTRY RECEPTACLE
			TURRET	OPEN ENTRY RECEPTACLE
			EYELET	OPEN ENTRY RECEPTACLE
			STRAIGHT	OPEN ENTRY RECEPTACLE
			WIRE WRAP	OPEN ENTRY RECEPTACLE

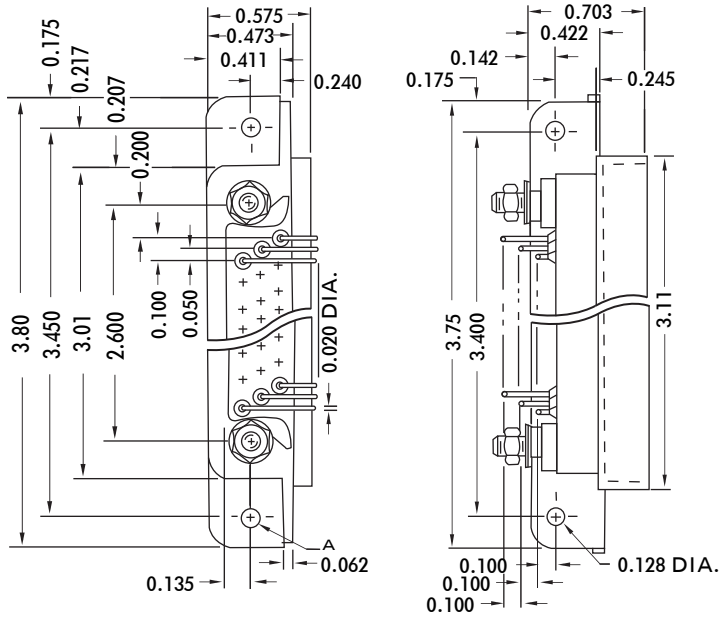

PLUG

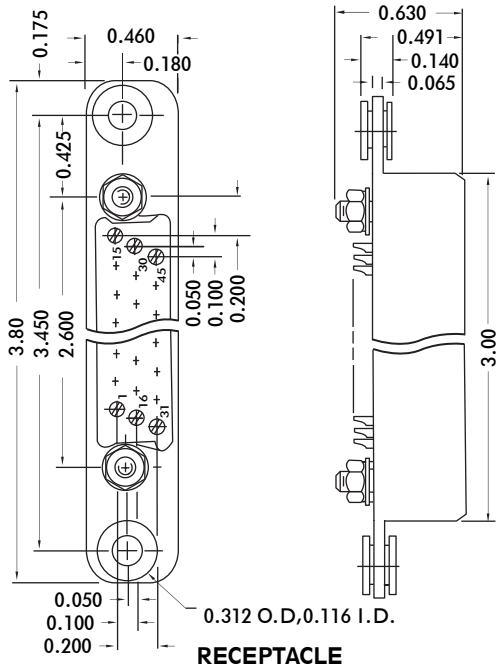

RECEPTACLE

FOR MECHANICAL AND ELECTRICAL SPECIFICATIONS SEE PAGE 27

DESIGNED FOR THE . . .
DEP 11, 15, 23, 37 and 45 Series Receptacles, thus allowing for additional protection and float when chassis mounted.

THE SHELLS . . .
are assembled to the back of a receptacle by employing the same hardware and or guides normally supplied with the connector.

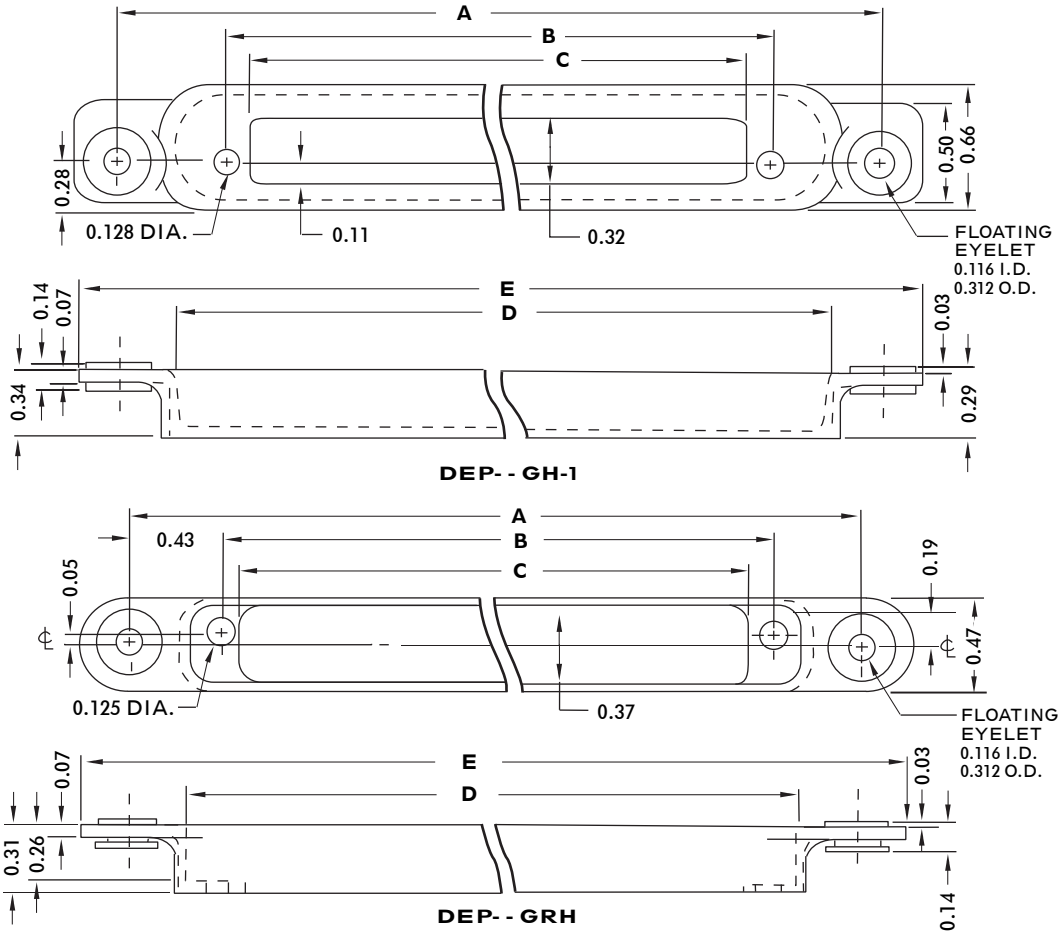

TABLE 1					
TYPE	"A"	"B"	"C"	"D"	"E"
DEP11GH-1	2.46	1.40	1.20	1.92	2.86
DEP15GH-1	2.86	1.80	1.60	2.32	3.26
DEP23GH-1	3.66	2.60	2.40	3.12	4.06
DEP37GH-1	5.06	4.00	3.80	4.52	5.46
DEP11GRH	2.26	1.40	1.20	1.71	2.73
DEP15GRH	2.66	1.80	1.60	2.11	3.13
DEP23GRH	3.46	2.60	2.40	2.91	3.93
DEP37GRH	4.86	4.00	3.80	4.31	5.33

MATERIAL: Aluminum per QQ-A-591
FINISH: Cadmium plated per QQ-P-416, Type II, Class 2

LP 50 SERIES

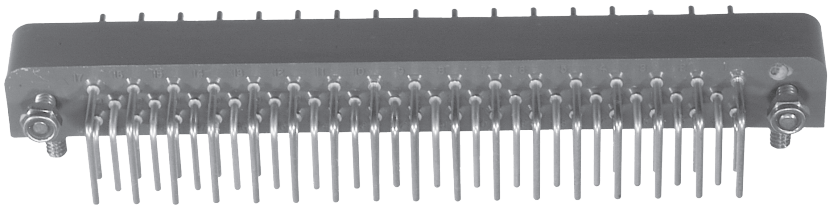

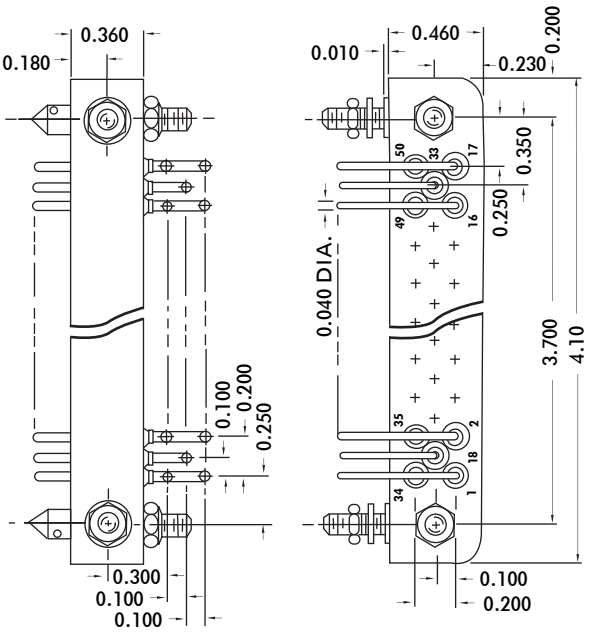

PLUG

CONTACT DATA		MOUNTING DATA							
		PANEL THICKNESS	DIMENSION	No. 4-40 A		No. 4-40 B		0.109D C	
			X	A	GUIDE	B	STUD	C	RIVET
PLUG	RIGHT ANGLE	.06	.15	.25	LP50P-859JV2	.25	LP50P-857JV2	.16	LP50P-861JV2
		.09	.15	.25	LP50P-859JV2	.25	LP50P-857JV2	.16	LP50P-861JV2
		.12	.15	.25	LP50P-859JV2	.25	LP50P-857JV2	.16	LP50P-861JV2
	STRAIGHT	.06	.20	.25	LP50P-592JV2	.25	LP50P-692JV2	.16	LP50P-992JV2
		.09	.23	.25	LP50P-593JV2	.25	LP50P-693JV2	.16	LP50P-993JV2
		.12	.23	.25	LP50P-593JV2	.25	LP50P-693JV2	.16	LP50P-993JV2
	SOLDER CUP	.06	—	.25	LP50P-792JV2	.25	LP50P-691JV2	.16	LP50P-991JV2
		.09	—	.25	LP50P-792JV2	.25	LP50P-691JV2	.16	LP50P-991JV2
		.12	—	.25	LP50P-792JV2	.25	LP50P-691JV2	.16	LP50P-991JV2

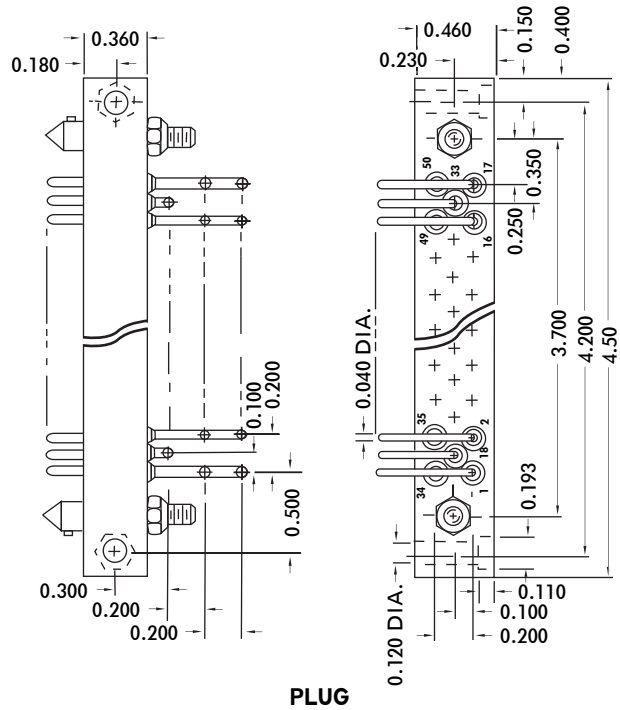

PLUG

CONTACT DATA		MOUNTING DATA					
		PANEL THICKNESS	DIMENSION	No. 4-40 "A"		"A"	
			X	A	GUIDE	A	THRU HOLE
PLUG	RIGHT ANGLE	.06	.15			.25	LP50P-6JV2
		.09	.15			.25	LP50P-6JV2
		.12	.21			.25	LP50P-1JV2
	STRAIGHT	.06	.20	.25	LP50P-92JV2	.25	LP50P-92JV2
		.09	.23	.25	LP50P-93JV2	.25	LP50P-93JV2
		.12	.23	.25	LP50P-93JV2	.25	LP50P-93JV2
	SOLDER CUP	.06	—	.25	LP50P-91JV2	.25	LP50P-91JV2
		.09	—	.25	LP50P-91JV2	.25	LP50P-91JV2
		.12	—	.25	LP50P-91JV2	.25	LP50P-91JV2

FOR MECHANICAL AND ELECTRICAL SPECIFICATIONS SEE PAGE 27

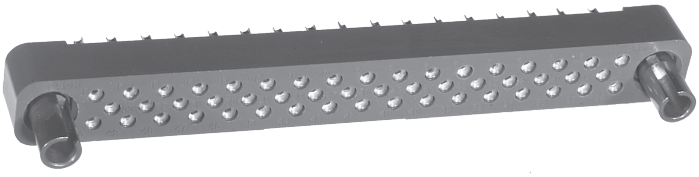

MOUNTING DATA					CONTACT DATA	
		DIMENSION		PANEL THICKNESS		
CLOSED ENTRY CONTACT	OPEN ENTRY CONTACT	A	X			
LP50K-201JV2	LP50S-201JV2	.25	.17	.06	SOLDER CUP	RECEPTACLE
LP50K-201JV2	LP50S-201JV2	.25	.17	.09		
				.12		
	LP50S-6JV2	.25	.22	.06	TURRET	
	LP50S-6JV2	.25	.22	.09		
				.12		
LP50K-3JV2	LP50S-203JV2	.25	.24	.06	EYELET	
LP50K-3JV2	LP50S-203JV2	.25	.24	.09		
				.12		
LP50K-4JV2	LP50S-34JV2	.25	.11	.06	STRAIGHT	
LP50K-244JV2	LP50S-8JV2	.25	.19	.09		
				.12		
LP50K-277JV2				.06	.025 SQ. WIRE WRAP	
LP50K-277JV2				.09		
				.12		

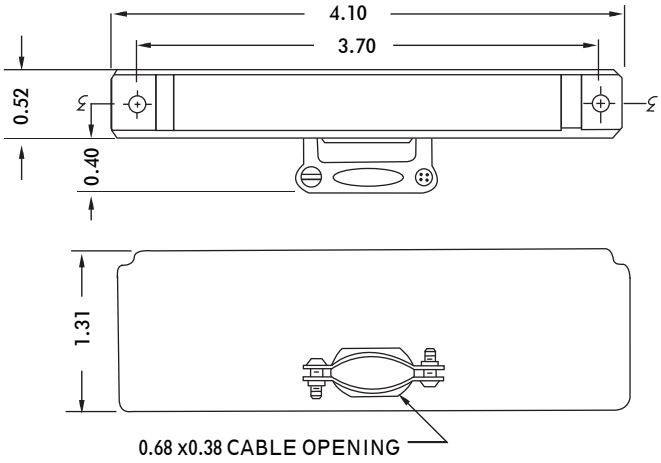

Hood No. LP50H3
Available with Locking Device

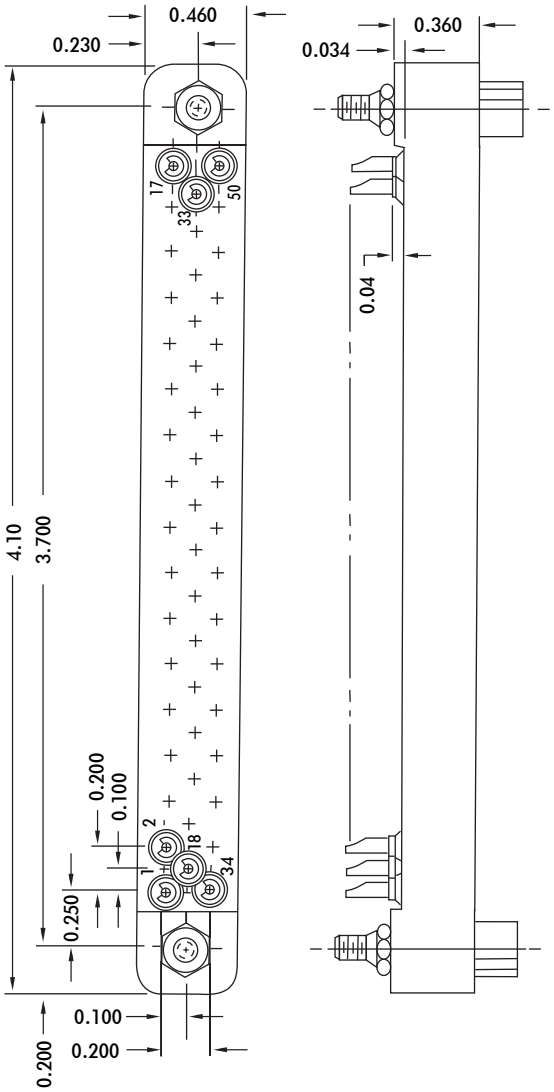

RECEPTACLE

FOR MECHANICAL AND ELECTRICAL SPECIFICATIONS SEE PAGE 27

LP 50 COAX

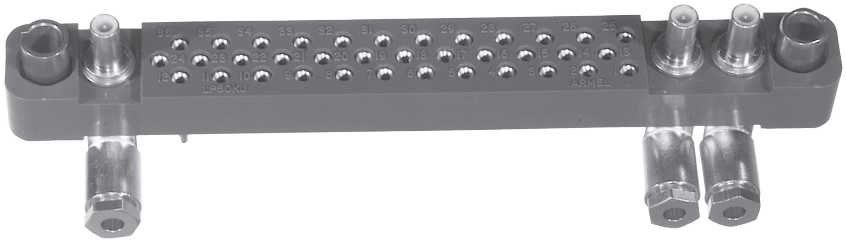

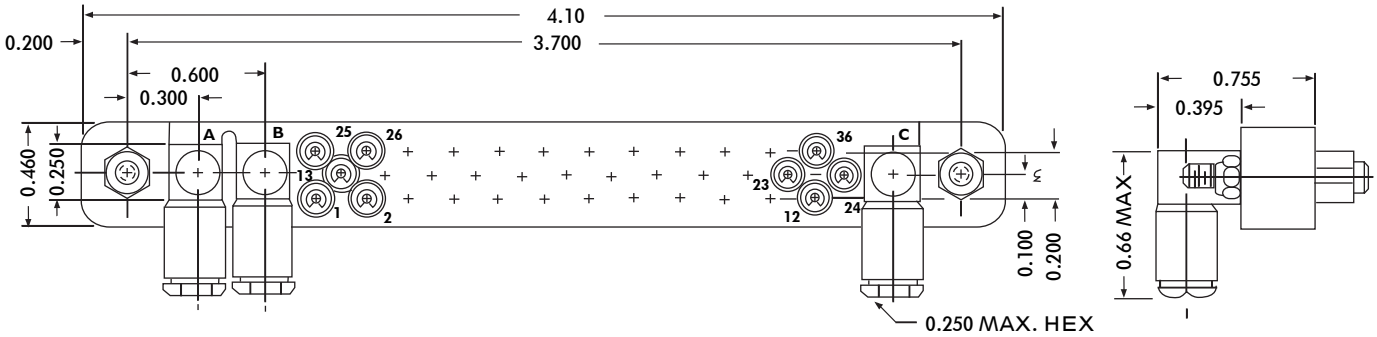

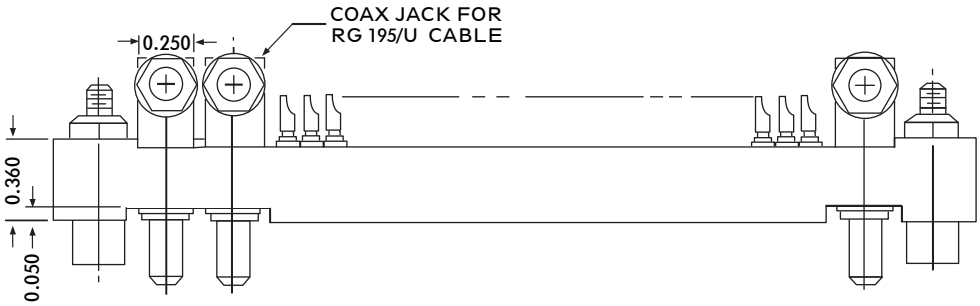

LP 50KJ-671JV2

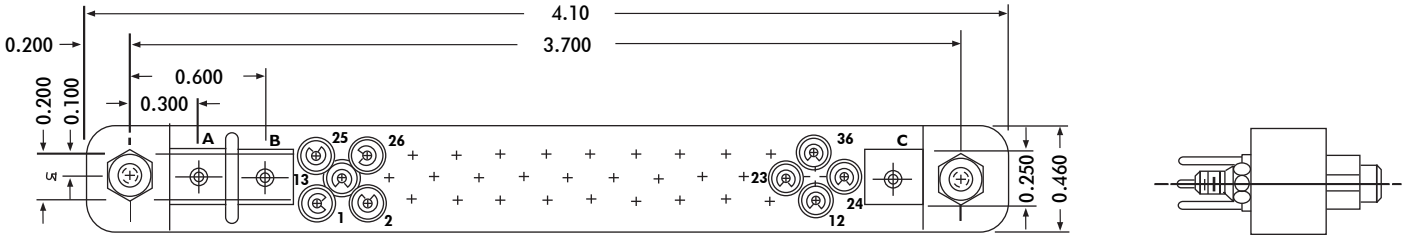

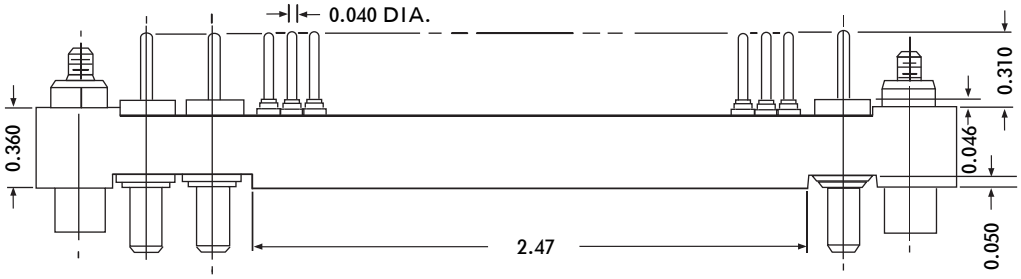

LP 50KJ-244JV2

FOR MECHANICAL AND ELECTRICAL SPECIFICATIONS SEE PAGE 27

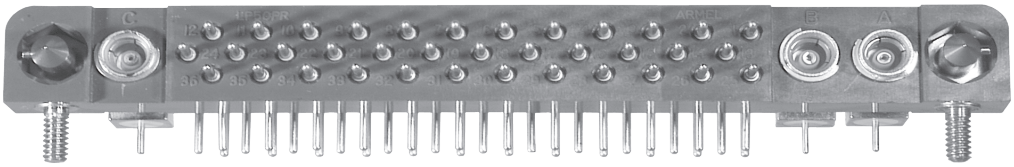

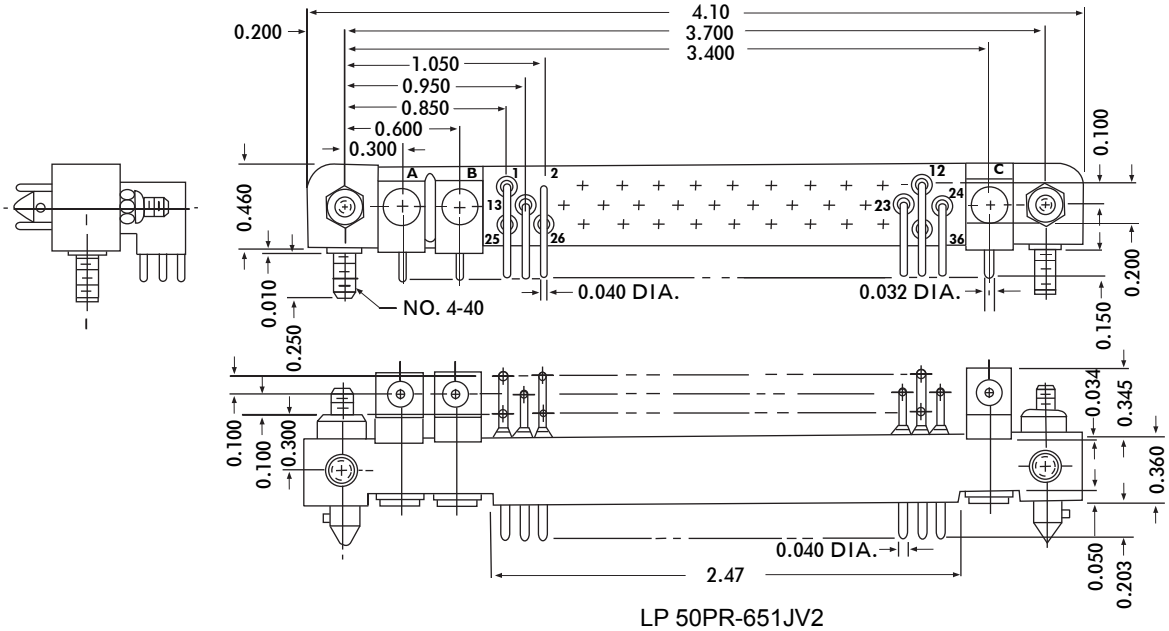

LP 50PR-651JV2

SPECIFICATIONS

Coaxial Contact Assembly	(MIL-C-39012, Class II)
Impedance	50 ohms, nominal
Dielectric Withstanding Voltage	
Contact to Contact Sea Level	1200 volts RMS Minimum
Contact to Contact 70,000 Feet	300 volts RMS Minimum
Contact Diameter	.020 inch
Contacts	Berylium Copper
Shell	Brass
Insulation Material	Polytetrafluoroethylene, per MIL-P-19468
Plating for Coaxial Connectors	Gold Plate (.00005/.00007) per MIL-G-45204, Type I, Class 1, Grade C over (.000005/.000010) gold plate per MIL-G-45204, grade A or B over (.0001/.000125) copper plate per MIL-C-14550, Class 4 Center conductor gold plate, (.0001/.000125) per MIL-G-45204, Type I, Class 2, Grade C over (.000005/.000010) gold plate per MIL-G-45204, Grade A or B over (.0001/.000125) copper plate per MIL-C-14550, Class 4.
Power Contacts, Hardware and Insulation Material	See LP Specifications on Page 27
Temperature Range	-65? C to +125? C
Approximate Weight	.7 oz.

SPECIFICATIONS

Listed on this page are the general specifications applicable to the illustrated DEP 7, 11, 15, 23, 36, 37 and LP 50 Series **printed circuit connectors.**

ELECTRICAL

Current Rating	7.5 amperes
Terminal Accomodation	
Solder Cup	One #20 AWG Wire
Eyelet and Turret	Two #20 AWG or Three #22 AWG Wire
Dielectric Withstanding Voltage	
Contact to Contact, Sea Level	1500 Volts RMS Minimum
Contact to Contact, 70,000 Ft.	375 Volts RMS Minimum

MECHANICAL

Contact Diameter	.040 Inch
Creepage Between Contacts	5/64 Inch Minimum
Air Space Between Contacts	3/64 Inch Minimum
Socket Contacts	Spring Tempered, Phosphor Bronze or Berylium Copper Gold Plated (0.00005 inch) per MIL-G-45204, Type II, Class 1 over Copper Strike
Pin Contacts	Phosphor Bronze or Brass, Gold Plated (0.00005 inch) per MIL-G-45204, Type II, Class 1 over Copper Strike
Guide Pins, Sockets & Hardware	
DEP Series	Brass, Cadmium Plated with Supplementary Chromate Finish or Stainless Steel Passivated
LP Series	Stainless Steel, Passivated
Mounting Studs and Hardware	Brass, NIckel Plated
Mounting Rivets	Brass, Hot Tin Dipped
Shell	Die Cast Aluminum, Cadmium Plated with Supplementary Chromate Finish
Floating Eyelets	Stainless Steel, Passivated
Insulation Material	
DEP Series	Suffix "J" (i.e. DEP23P-3JV2) Diallyl Phthalate, Glass-Fiber Filled, per MIL-M-14, Type GDI-30F Suffix "H" (i.e. DEP23P-3HV2) Diallyl Phthalate, Orlon Filled, per MIL-M-14, Type SDI-5 Suffix "L" (i.e. DEP23P-3LV2) Diallyl Phthalate, Glass-Fiber Filled per MIL-M-14, Type SDG-F

NOTE: DEP-M Type plugs are only available in "J" material.
DEP-P Type plugs and all receptacles are available in "J" or "H" material.
For Color and material compatibility when ordering plugs and receptacles we recommend one type of insulation material be specified.

LP Series	Diallyl Phthalate, Glass-Fiber Filled, per MIL-M-14, Type GDI-30F
Temperature Range	-65? C +125? C

APPROXIMATE WEIGHT	.33 oz.		.26 oz.
DEP 7 (pin)	.44 oz.	DEP 7 (socket)	.32 oz.
DEP 11 (pin)	.51 oz.	DEP 11 (socket)	.40 oz.
DEP 15 (pin)	.87 oz.	DEP 15 (socket)	.67 oz.
DEP 15 (pin-shell)	.63 oz.	DEP 15 (socket-shell)	.52 oz.
DEP 23 (pin)	1.10 oz.	DEP 23 (socket)	.85 oz.
DEP 23 (pin-shell)	.43 oz.	DEP 23 (socket-shell)	.45 oz.
DEP 36 (pin)	.94 oz.	DEP 36 (socket)	.70 oz.
DEP 37 (pin)	1.80 oz.	DEP 37 (socket)	1.30 oz.
LP 50 (pin)		LP 50 (socket)	

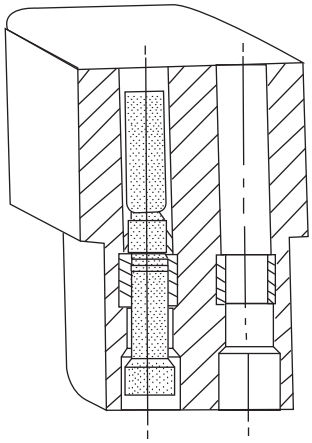

Crimp
Removable Contacts

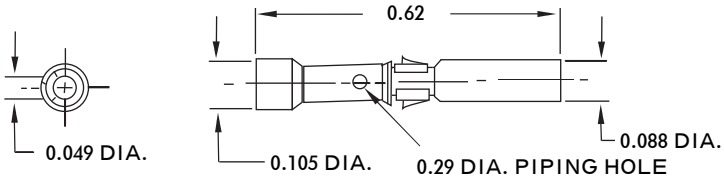

Closed Entry Contact
No. 1007003-1

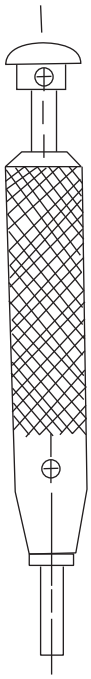

Removing Tool
No. T9066-1

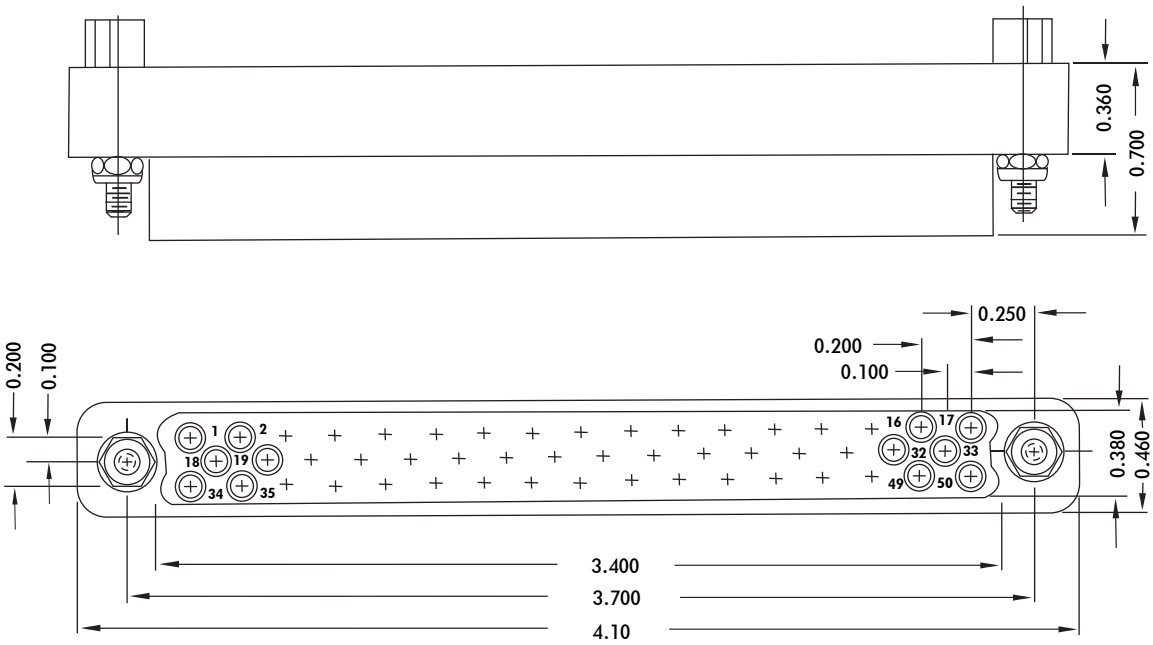

LP 50CK-270J

SPECIFICATIONS

Current Rating	7.5 amperes
Contact Size	0.040 Inch
Terminal Accomodation	One No. 18, One No. 20, One or Two No. 22, Two or Three No. 24 AWG Wire
Contact Material & Plating (Sleeve-Brass)	Phosphor, Bronze, Gold Plated (0.000050 inch) per MIL-G-45204, Type II, Class I, Over Copper Plate
Contact Retaining Clip	Stainless Steel, Passivated
Guide Sockets & Hardware	Stainless Steel, Passivated
Insulation Material	Diallyl Phthalate, Glass-Fiber Filled per MIL-M-14, Type GDI-30F
Crimping Tool	No. MS 3191A
Positioner	No. 612192
Insertion Tool	Not required

KEYED PILOT ARRANGEMENTS

64 (DEP Series)
144 (LP Series)

Keying Arrangements can be obtained by positioning keyed Pilot Pin and Sockets in their (DEP Square) (LP Haxagonal) — Bases

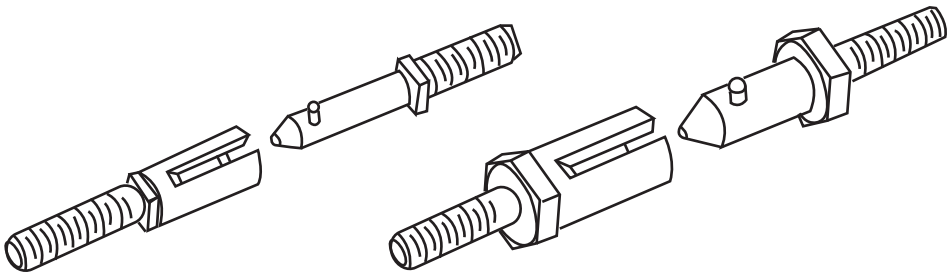

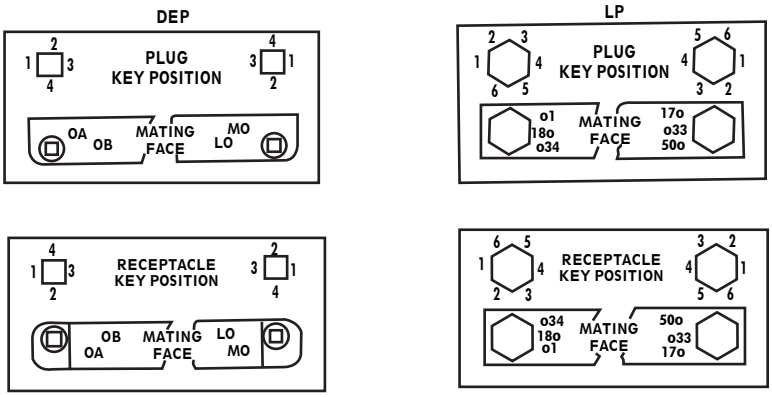

FIRST SYMBOL:

A — Plug, 2 Pilot Pins
Receptacle, 2 Pilot Sockets

B — Plug, 2 Pilot Sockets
Receptacle, 2 Pilot Pins

C — Plug, 1 Pilot Pin Adjacent to Contact A, or lowest number Contact
1 Pilot Socket Adjacent to highest letter, or number Contact
Receptacle, 1 Pilot Socket, Adjacent to Contact A, or lowest number Contact
1 Pilot Pin Adjacent to highest letter, or number Contact

D — Plug, 1 Pilot Socket, Adjacent to Contact A, or lowest number Contact
1 Pilot Pin Adjacent to highest letter, or number Contact
Receptacle, 1 Pilot Pin Adjacent to Contact A, or lowest number Contact
1 Pilot Socket Adjacent to highest letter, or number Contact

SECOND SYMBOL: Indicates keying position of Pilot Adjacent to lowest letter or numbered Contact

THIRD SYMBOL: Indicates keying position of Pilot Adjacent to highest letter or numbered Contact

DEP23P-1-A11J
LP50P-1-A11J

- Insulation Material
- Second and Third Symbol (1-4) or (1-6)
- First Symbol (A-D) Pilot Arrangement

Material and Finish
Stainless Steel, Passivated

NOTE: Mating Connectors will have the same keying code
Keying arrangements can also be adapted to the CP Series

DEP-LP LOCKING DEVICE

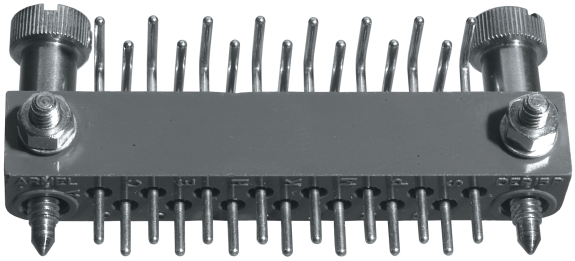

DEP 15P-3-15JV2

DEP 15S-1-02JV2

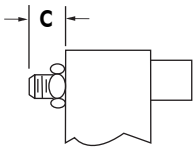

FIG.1

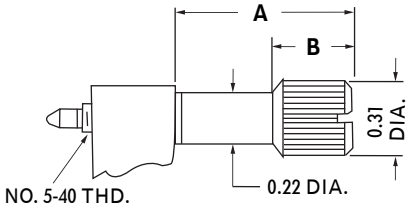

FIG.3

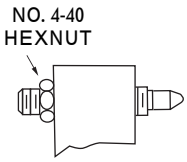

FIG.2

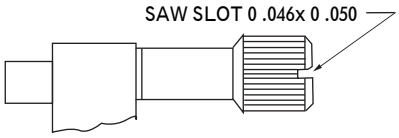

FIG.4

LOCKING DEVICE - PLUG OR RECEPTACLE									
PART	ROTATING		NON-ROTATING		FIG.	DIMENSION			
NO.	PIN	SOCKET	PIN	SOCKET	NO.	?A?	?B?	?C?	
-07				2	1			.31	
-08				2	1			.16	
-12	2				3	.76	.33		
-14	2				3	.61	.26		
-15	2				3	.44	.16		
-16	2				3	.36	.16		
-25			1	1	1-2			.16	**
-28			1	1	1-2			.31	**
-31	1	1			3-4	.76	.33		*
-33	1	1			3-4	.61	.26		*
-34	1	1			3-4	.44	.16		*
. -35	1	1			3-4	.39	.31		*
-36	1	1			3-4	.36	.16		*
-45			2		2			.31	
-46			2		2			.16	
-52		2			4	.76	.33		
-54		2			4	.61	.26		
-55		2			4	.44	.16		
-56		2			4	.36	.16		
-65			1	1	1-2			.16	*
-68			1	1	1-2			.31	*
-71	1	1			3-4	.76	.33		**
-73	1	1			3-4	.61	.26		**
-74	1	1			3-4	.44	.16		**
. -75	1	1			3-4	.39	.31		**
-76	1	1			3-4	.36	.16		**

* PILOT PIN ADJACENT TO CONTACT "A".
** PILOT SOCKET ADJACENT TO CONTACT "A".
. MAY BE USED WITH CABLE BRACKETS DETAILED ON PAGE 36

LOCKING DEVICE:
Positive Locking Device Hardware prevents disengagement during vibration and shock and avoids accidental disconnect.

MATERIAL AND FINISH:
LOCKING DEVICE: Stainless Steel, Passivated
HEXNUTS, SPLIT LOCKWASHERS & FLAT WASHERS stainless steel, passivated.

CP 10 SERIES

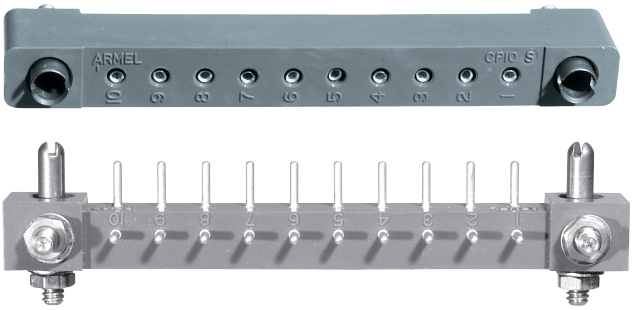

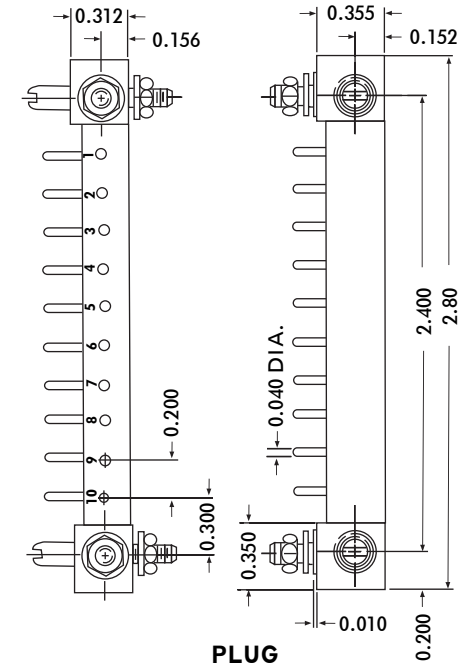

PLUG

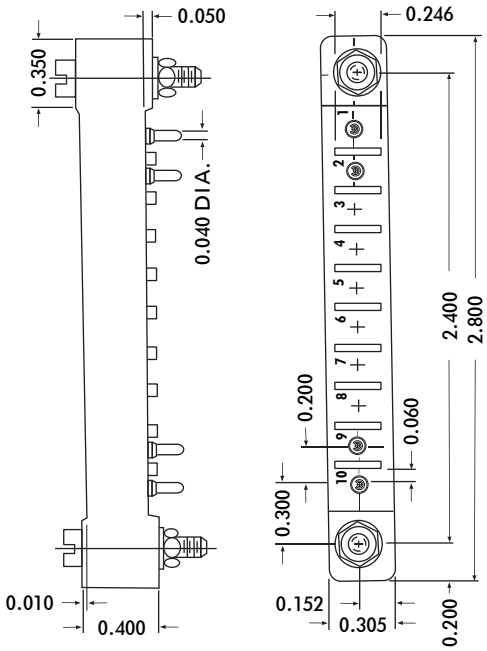

RECEPTACLE

CONTACT DATA		MOUNTING DATA							
		PANEL THICKNESS	DIMENSION	A (No. 4-40)		B (No. 4-40)		C (0.109D)	
		X	A	INSERT		B	STUD	C	RIVET
PLUG	x	.06	.12			.23	CP10P-3JV2		
		.09							
		.12							

CONTACT DATA			MOUNTING DATA							
			PANEL THICKNESS	DIMENSION	A (No. 4-40)		B (No. 4-40)		C (0.109D)	
			X	A	GUIDE		B	STUD	C	RIVET
RECEPTACLE OPEN ENTRY	SOLDER CUP	x								
	TURRET	x								
	EYELET	x								
	STRAIGHT PIN	x	.06							
			.09							
			.12	.13	.28	CP10S-3JV2				

FOR MECHANICAL AND ELECTRICAL SPECIFICATIONS SEE PAGE 33

CP 12 SERIES

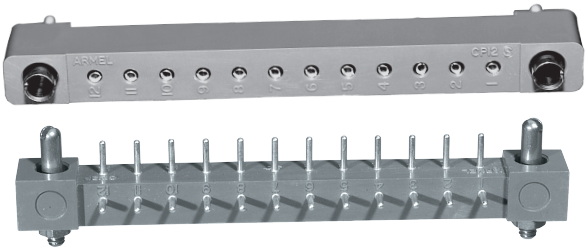

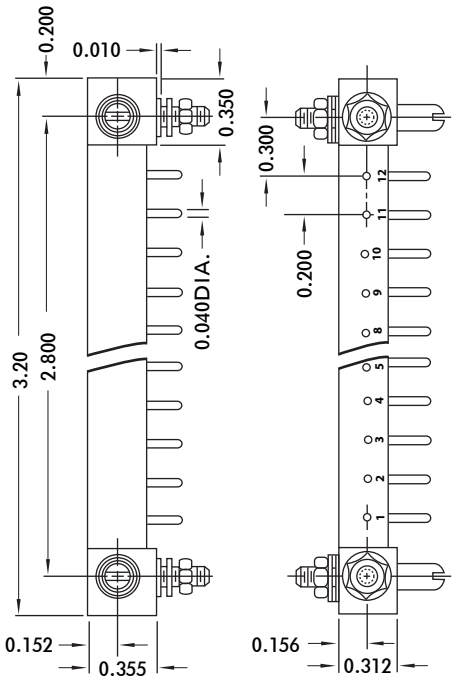

PLUG

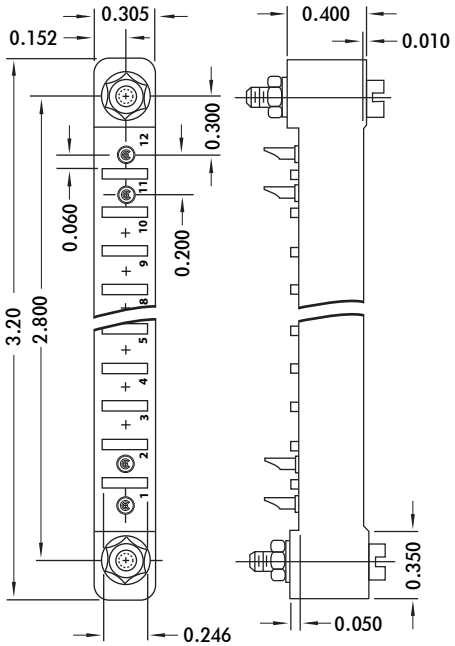

RECEPTACLE

MOUNTING DATA								CONTACT DATA	
RIVET	C	STUD	B	GUIDE	A	X	PANEL THICKNESS		
				CP12P-5JV2	.19	.12	.06		PLUG
							.09		
							.12		

MOUNTING DATA								CONTACT DATA		
RIVET	C	STUD	B	GUIDE	A	X	PANEL THICKNESS			
							.06	SOLDER CUP	OPEN ENTRY	RECEPTACLE
							.09			
				CP12S-105JV2	.28	.15	.12			
							.06	TURRET		
							.09			
							.12			
							.06	EYELET		
							.09			
							.12			
							.06	STRAIGHT PIN		
							.09			
				CP12S-5JV2	.28	.13	.12			

FOR MECHANICAL AND ELECTRICAL SPECIFICATIONS SEE PAGE 33

ELECTRICAL

Current Rating	7.5 amperes
Terminal Accomodation	
Solder Cup	One #20 AWG Wire
Eyelet and Turret	Two #20 AWG or Three #22 AWG Wire
Dielectric Withstanding Voltage	
Contact to Contact, Sea Level	2700 Volts RMS Minimum
Contact to Contact, 70,000 Ft.	560 Volts RMS Minimum

MECHANICAL

Contact Diameter	.040 Inch
Creepage Between Contacts	5/32 Inch Minimum
Air Space Between Contacts	1/8 Inch Minimum
Polarization	Guide Pins and Sockets
Socket Contacts	Spring Tempered Beryllium Copper, Gold Plated (0 .00005 inch) over copper strike
Pin Contacts	Brass, Gold Plated (0 .00005 inch) over copper strike
Guide Pins, Sockets & Hardware	Stainless Steel, Passivated
Mounting Studs and Hardware	Brass, Nickel Plated
Mounting Rivets	Brass, Hot Tin Dipped
Insulation Material	Diallyl Phthalate, Glass-Fiber Filled, MIL-M-14, Type GDI-30F. Choice of other "Mil Approved" Thermosetting Insulation (See Page 46)
Temperature Range	-65? C to +125? C

APPROXIMATE WEIGHT

CP 10 (pin)	.40 oz.
CP 10 (socket)	.40 oz.
CP 12 (pin)	.45 oz.
CP 12 (socket)	.45 oz.

SPECIFICATIONS

Listed on this page are the general specifications applicable to the illustrated CP Series **printed circuit connectors.**

CB BRACKETS

DESIGNED FOR THE . . . DEP 11, 15, 23, 36, 37 and 45 Series Receptacles, THE BRACKETS . . . are assembled to the back of a receptacle by employing the same hardware and or guides normally supplied with the connector.

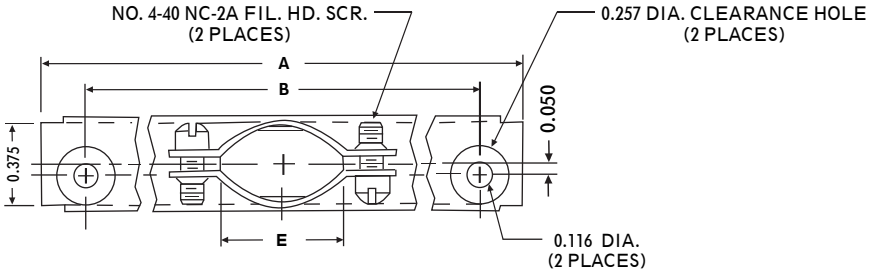

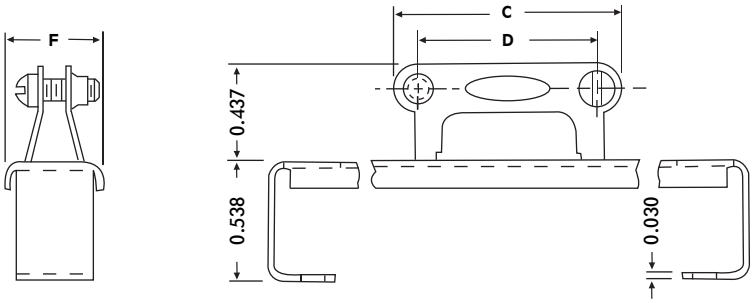

TYPE	A	B	C	D	E	F
DEP-11CB-1	1.800	1.400	0.843	0.625	0.406	0.546
DEP-15CB-1	2.200	1.800	1.031	0.812	0.562	0.546
DEP-23CB-1	3.000	2.600	1.031	0.812	0.562	0.546
DEP-36CB-1	2.550	2.150	1.031	0.812	0.562	0.546
DEP-37CB-1	4.400	4.000	1.118	0.900	0.688	0.546
DEP-45CB-1	3.000	2.600	1.031	0.812	0.562	0.546

TYPE	A	B	C	D	E	F
DEP-11CB-2	1.800	1.400	0.843	0.625	0.406	0.440
DEP-15CB-2	2.200	1.800	1.031	0.812	0.562	0.440
DEP-23CB-2	3.000	2.600	1.031	0.812	0.562	0.440
DEP-36CB-2	2.550	2.150	1.031	0.812	0.562	0.440
DEP-37CB-2	4.400	4.000	1.118	0.900	0.688	0.440
DEP-45CB-2	3.000	2.600	1.031	0.812	0.562	0.440

1. MATERIAL :

Cable Bracket, Screws :- Cres. per QQ-S-763/766.
Class 303, Cond. A.
Cable Clamp :- Aluminum.

2. FINISH :-

Cable Bracket, Screws :- Passivated per QQ-P-35.
Cable Cramp :- Anodized.

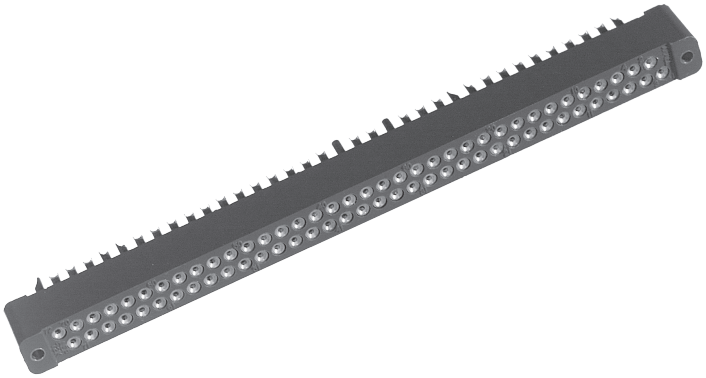

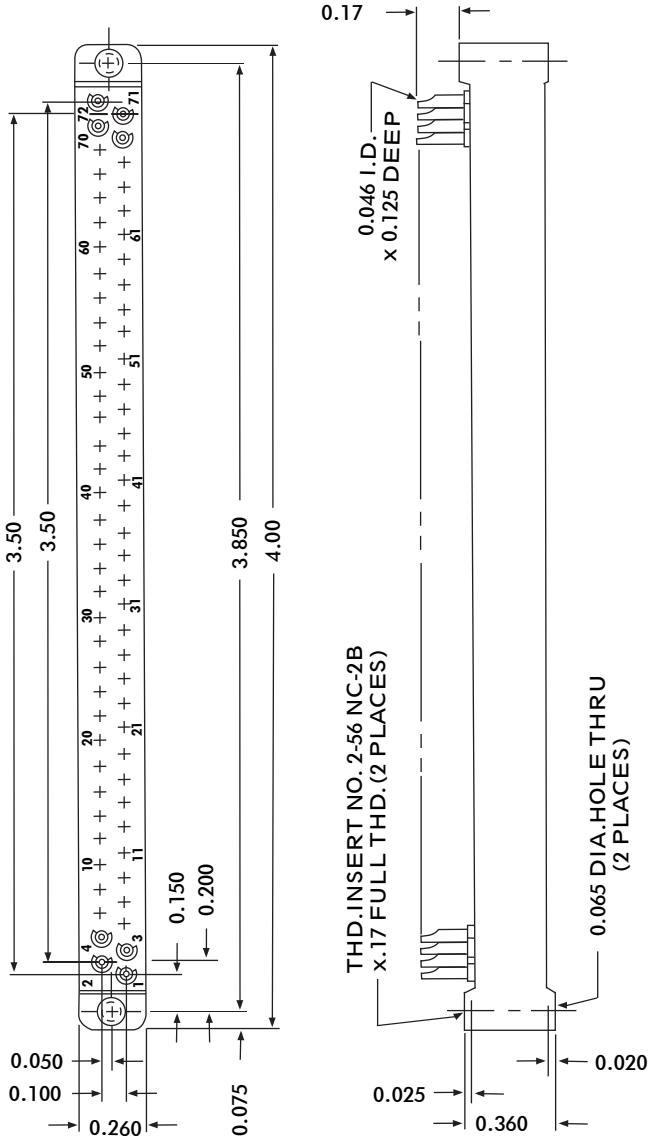

AEP72K-1JV2

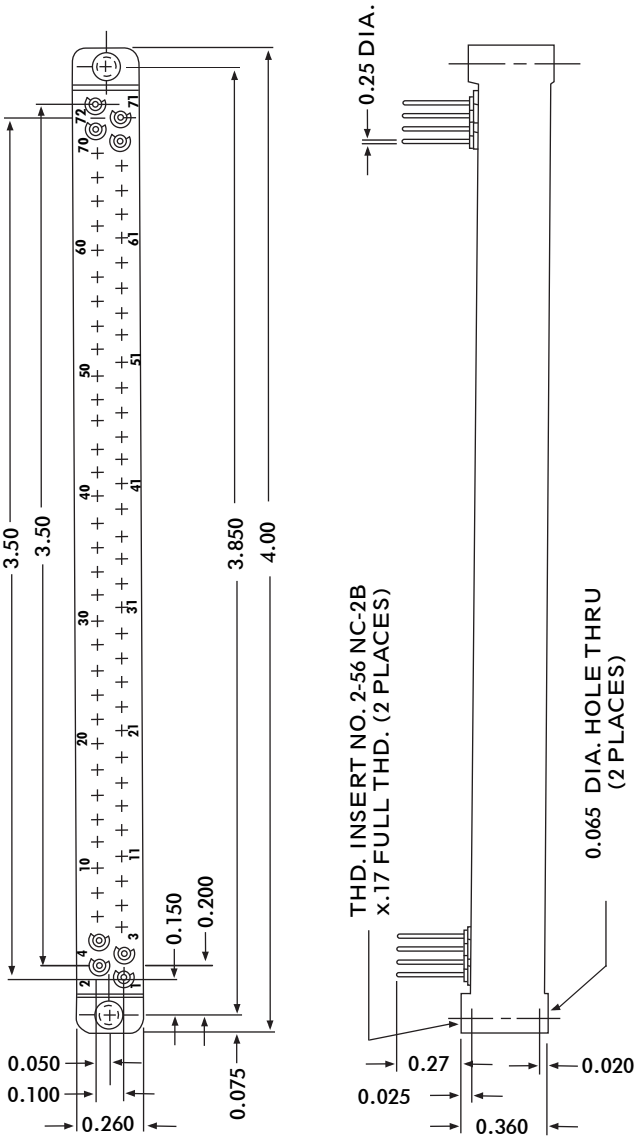

AEP72K-4JV2

FOR MECHANICAL AND ELECTRICAL SPECIFICATIONS SEE PAGE 36

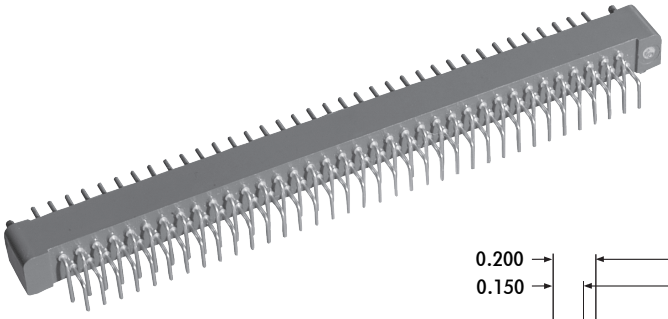

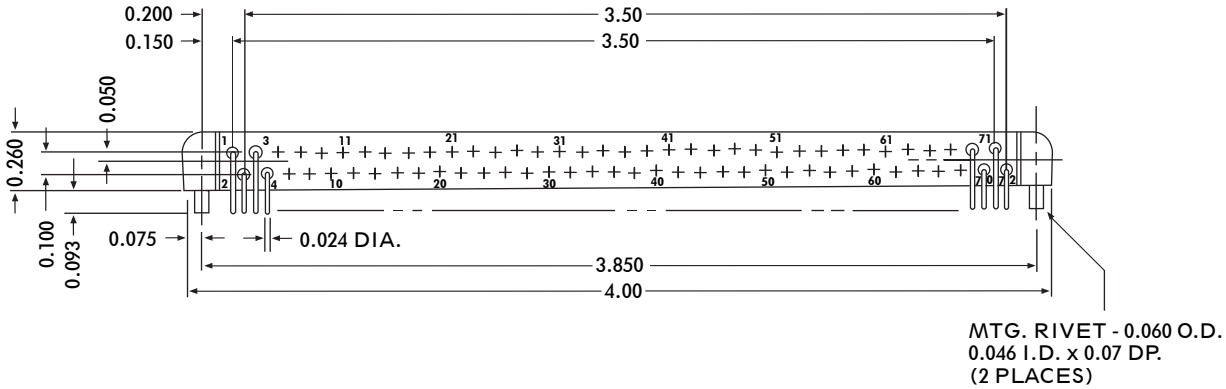

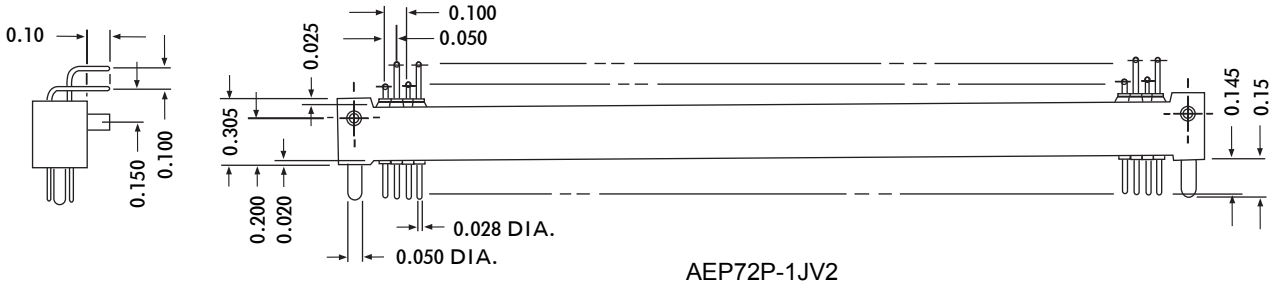

AEP72P-1JV2

SPECIFICATIONS

ELECTRICAL

Contact Rating	3 amperes
Solder Cup Accomodation	One #24 AWG Wire
Dielectric Withstanding Voltage	
Contact to Contact, Sea Level	1000 Volts RMS Minimum
Contact to Contact, 70,000 Ft.	300 Volts RMS Minimum

MECHANICAL

Contact Diameter	0.028 Inch
Polarization	Contact Arrangement
Socket Contacts	Spring Tempered Grade "A" Phosphor Bronze, Gold plated (0.00005 Inch) per MIL-G-45204, Type II, Class 1 over Copper Plate (Other Platings also available)
Pin Contacts	Grade "A" Phosphor Bronze, Gold Plated (0.00005 Inch) per MIL-G-45204 Type II, Class I over Copper Plate (Other Platings also available)
Guide Pins, Sockets	Stainless Steel, Passivated
Mounting Rivets & Threaded Inserts	Stainless Steel, Passivated
Insulation Material	Diallyl Phthalate, Glass Filled per MIL-M-14, Type GDI-30F
Temperature Range	-65? C to +125? C

Approximate Weight

AEP72 (pin)	.51 oz.
AEP72 (socket)	.59 oz.

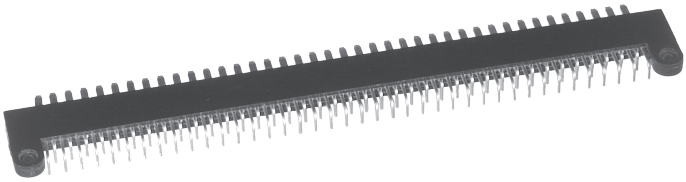

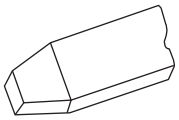

BLADE CONTACTS

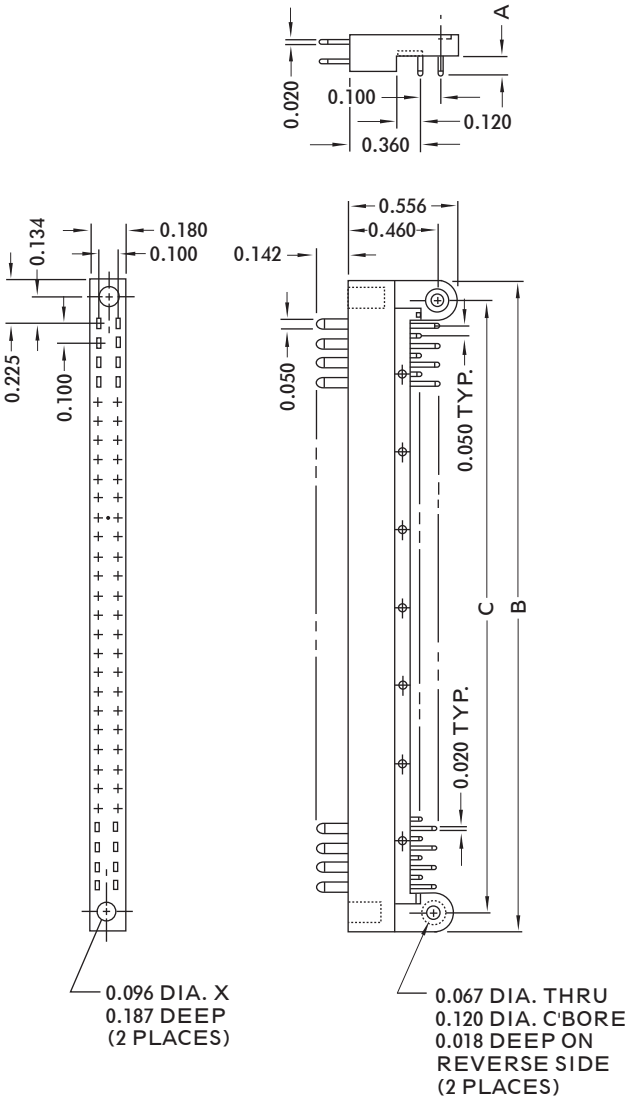

NO. OF CONTACTS	PART NO.	A	B	C
34	PCP-34P- 2L2T3	.080	2.05	1.850
	PCP-34P- 3L2T3	.120		
	PCP-34P- 4L2T3	.095		
60	PCP-60P- 2L2T3	.080	3.35	3.150
	PCP-60P- 9L2T3	.120		
	PCP-60P- 4L2T3	.095		
80	PCP-80P- 2L2T3	.080	4.35	4.150
	PCP-80P- 3L2T3	.120		
	PCP-80P- 4L2T3	.095		

SPECIFICATIONS

ELECTRICAL

Current Rating . . . . . 3 amperes
Dielectric Withstanding Voltage . . . .
Contact to Contact
Sea Level . . . . . 1500 Volts
70,000 Feet . . . . . 375 Volts

MECHANICAL

Contact Material . . . . . Brass, QQ-B-613
1/2 Hard, Comp. 2
Contact Finish . . . . . Gold Plated, MIL-G-45204
Type II, Class 1 over
Nickel Plate, QQ-N-290
Type VII, Class 1
Insulation Material . . . . . Diallyl Phthalate
MIL-M-14, Type SDG-F
Color Black

LFP and PC-P SERIES

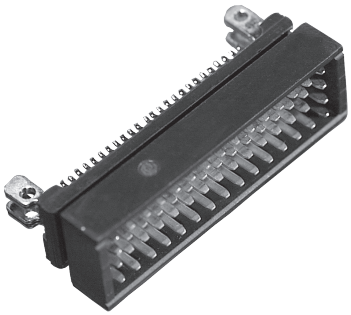

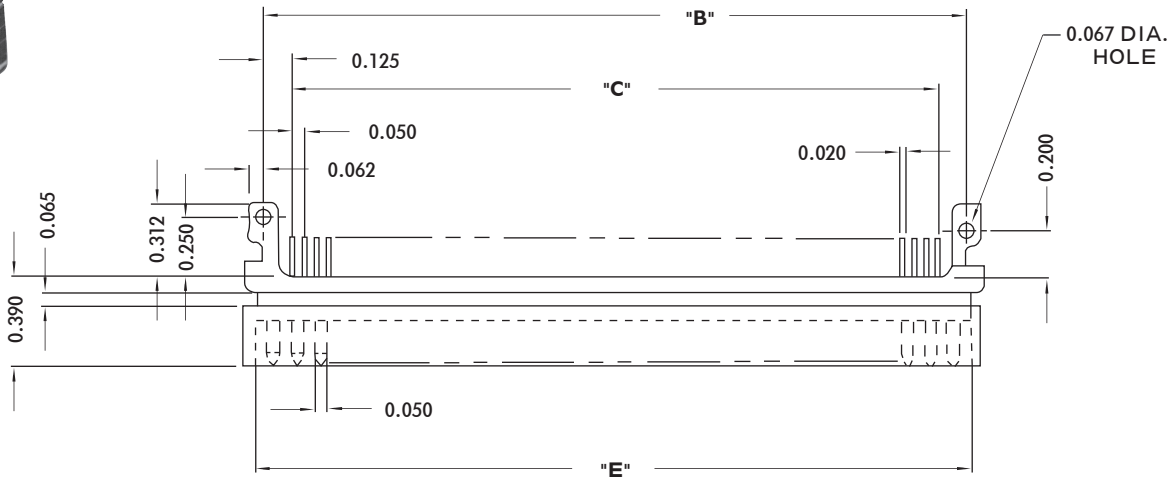

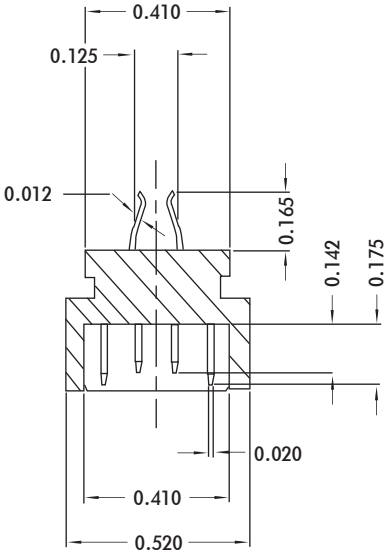

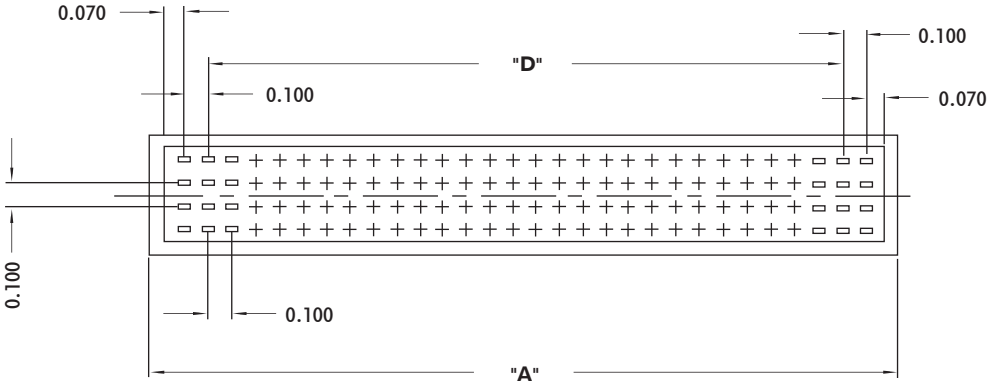

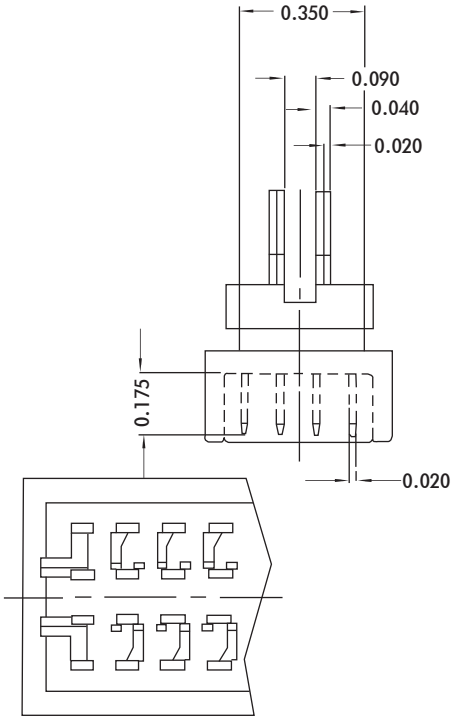

TRANSPARENT AS SEEN FROM MATING SURFACE

PART NO.	"A"	"B"	"C"	"D"	"E"
PC-44P-IL2FT3	1.250	1.100	0.850	0.800	1.140
PC-60P-IL2FT3	1.650	1.500	1.250	1.200	1.540
PC-88P-IL2FT3	2.350	2.200	1.950	1.900	2.240
PC-120P-IL2FT3	3.150	3.000	2.750	2.700	3.040

Commercial part LFP- with T2 plating is equivalent to PC- above with T3 plating

SPECIFICATIONS

Current Rating . . . . . .5 Amperes
Dielectric Withstanding Voltage:
Contact to Contact
Sea Level . . . . . .1100 Volts
70,000 Feet. . . . . 375 Volts

CONTACTS:
Signal Contact . . . . . .Brass per QQ-B-613, 1/2 Hard, Composition 2
Ground Contact. . . . . .Cres per ASTM-A-666, CLASS 302
Contact Finish. . . . . .Gold Plated per MIL-G-45204, Type II, Class 1 over Nickel Plate per QQ-N-290, Type VII, Class 1
Contact Tails. . . . . Hot Solder Dipped, 60/40 Tin Lead per QQ-S-571 (OTHER PLATINGS AVAILABLE UPON REQUEST)
Insulation Material. . . . . .Diallyl Phthalate per MIL-M-14, Type SDG-F, Color Black

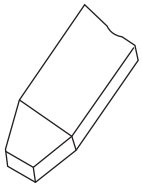

BLADE
CONTACTS

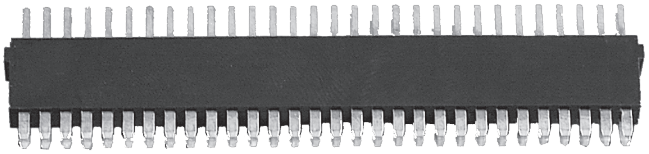

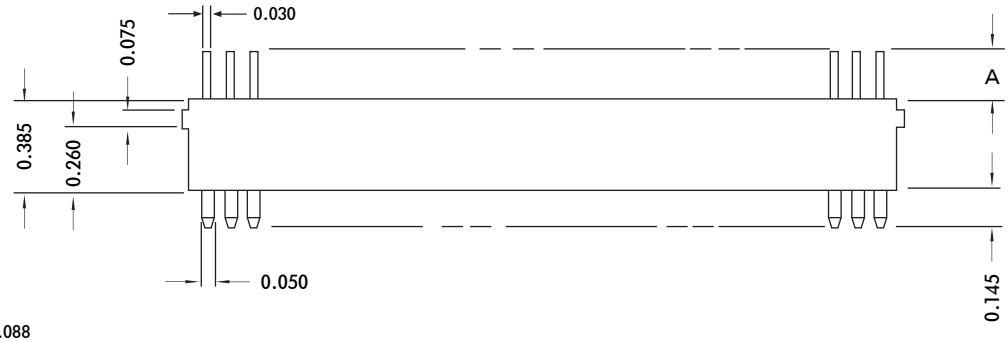

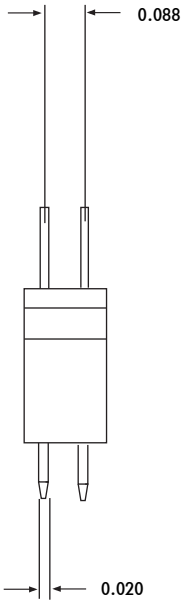

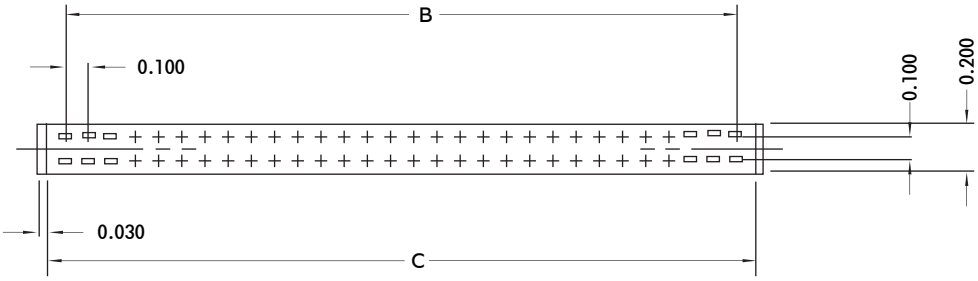

PART NO.	A	B	C
PCPB-30P-1-1 L2T3	0.200	1.400	1.55
PCPB-30P-1-2 L2T3	0.200	1.400	1.55
PCPB-40P-1-1 L2T3	0.200	1.900	2.05
PCPB-40P-1-2 L2T3	0.200	1.900	2.05
PCPB-60P-1-1 L2T3	0.200	2.900	3.05
PCPB-60P-1-2 L2T3	0.200	2.900	3.05
PCPB-70P-1-1 L2T3	0.200	3.400	3.55
PCPB-70P-1-2 L2T3	0.200	3.400	3.55

FOR MECHANICAL AND ELECTRICAL SPECIFICATIONS SEE PAGE 37

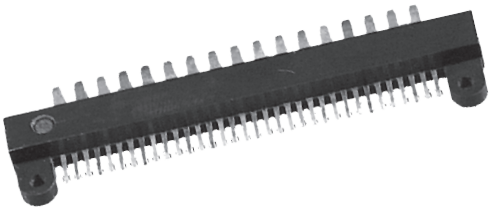

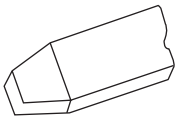

BLADE
CONTACTS

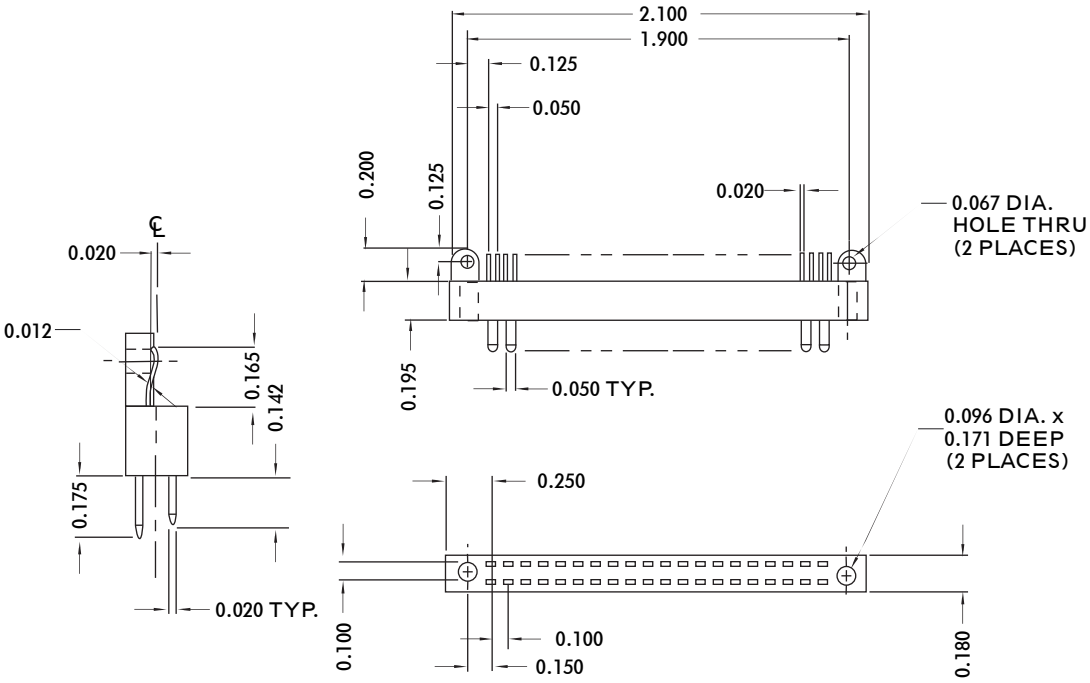

PCPE-34P-1L2T3

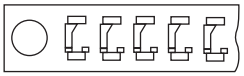

TRANSPARENT VIEW AS SEEN
FROM MATING SURFACE

FOR MECHANICAL AND ELECTRICAL SPECIFICATIONS SEE PAGE 37

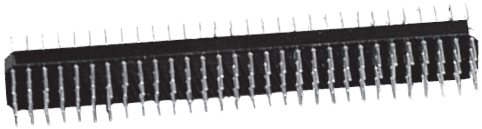

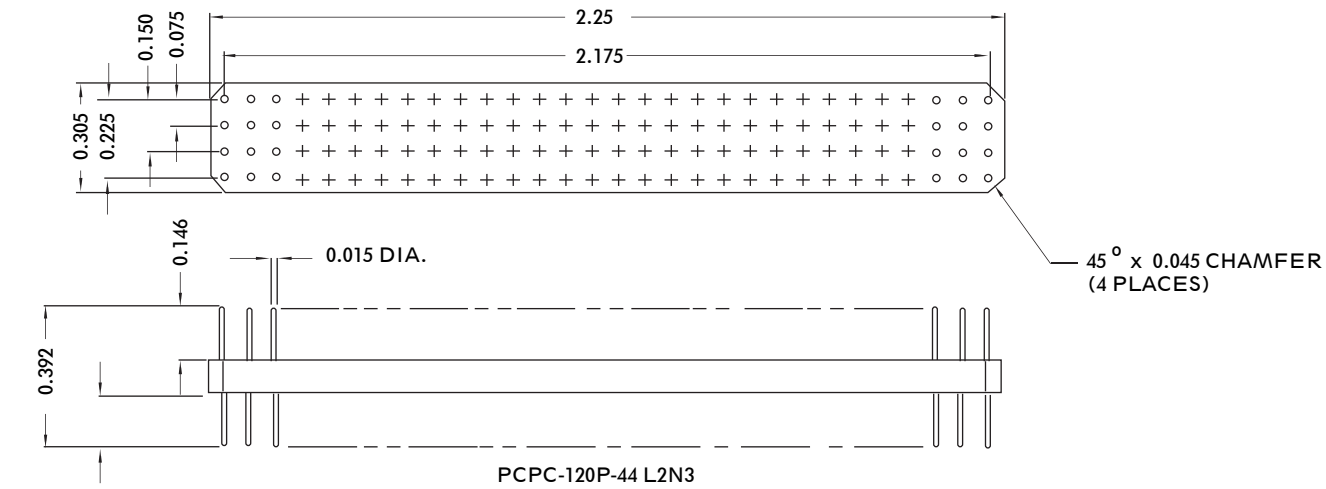

PCPC-120P-44 L2N3

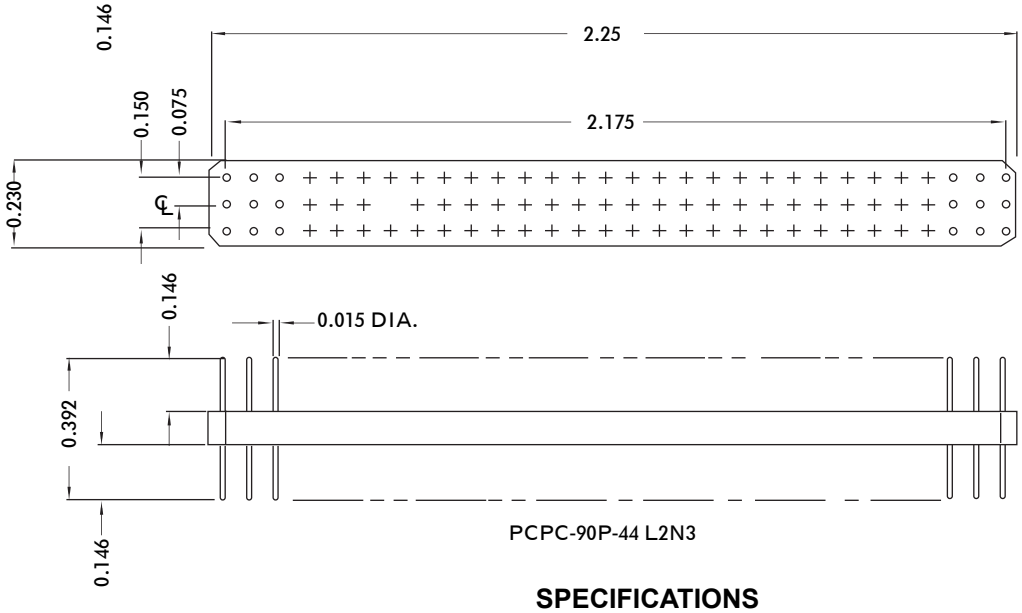

PCPC-90P-44 L2N3

SPECIFICATIONS

ELECTRICAL:

Current Rating . . . . . 3 Amperes
Dielectric Withstanding Voltage:
Contact to Contact
Sea Level . . . . . 1100 Volts
70,000 Feet. . . . . .375 Volts

MECHANICAL:

Contact Material. . . . . Phosphor Bronze, per QQ-B-750
Tin Plated, per MIL-P-81728
(0.00030 Inch Min.)
Insulation Material. . . . . .Diallyl Phthalate per MIL-M-14,
Type SDG-F, Color Black

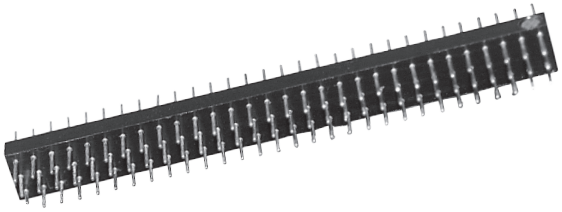

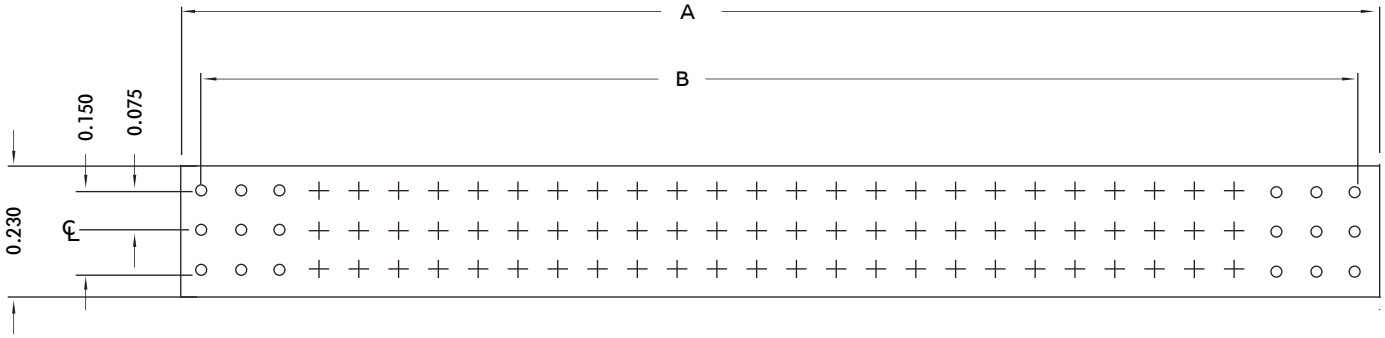

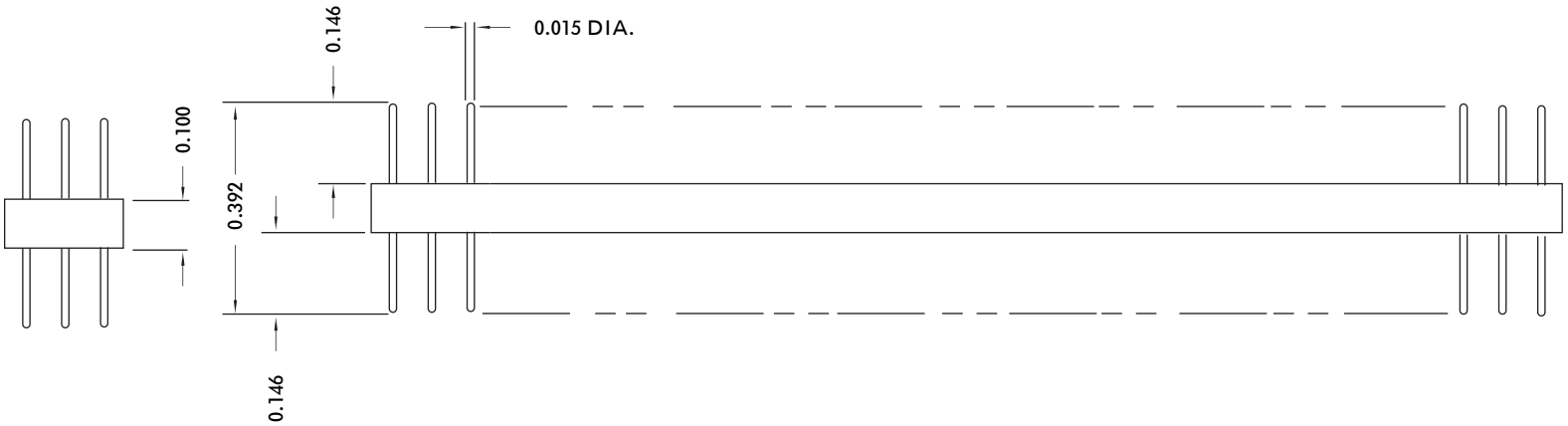

PART NO.	A	B
PCPC-90P-1L2N3	2.25	2.175
PCPC-92P-1L2N3	2.33	2.250
PCPC-93P-1L2N3	2.33	2.250
PCPC-120P-1L2N3	3.00	2.925

FOR MECHANICAL AND ELECTRICAL SPECIFICATIONS SEE PAGE 41

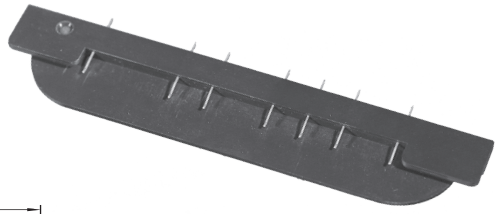

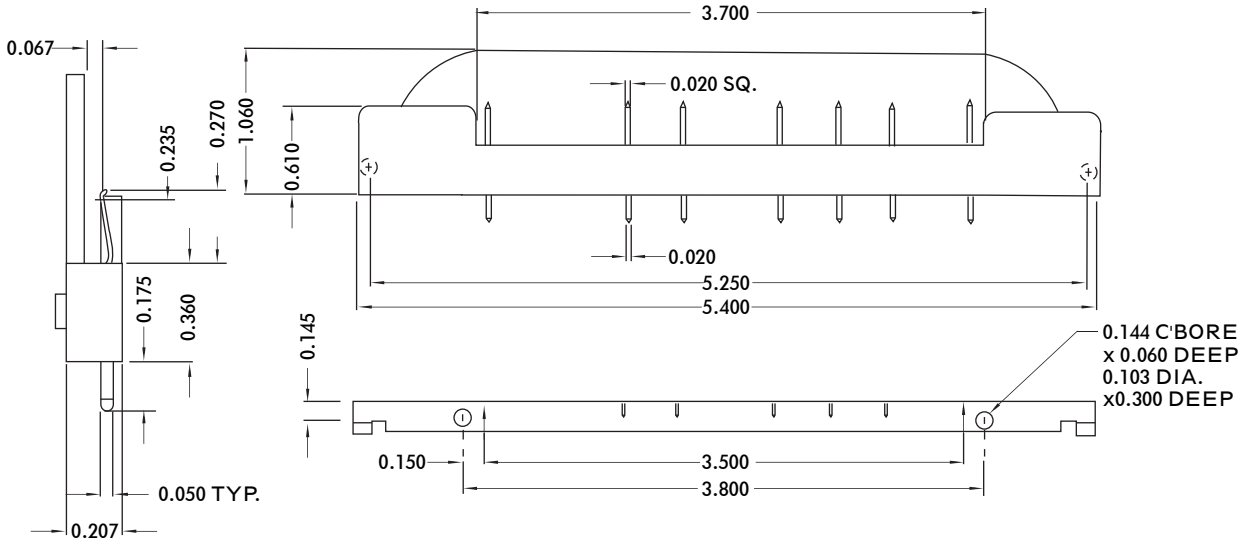

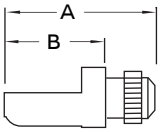

	A	B
NO.1005064-1	0.390	0.270
NO.1005064-2	0.350	0.230

PART NO.	NUMBER OF CONTACTS	CONTACTS INCLUDED
PCPF-7P-1L2T3	7	1 , 11 , 15 , 22 , 26 , 30 & 36
PCPF-11P-1L2T3	11	3 , 11 , 17 , 18 , 22 , 23 , 28 , 29 , 31 , 33 & 34
PCPF-7P-2L2T3	7	2 , 6 , 10 , 13 , 21 , 25 & 29
PCPF-8P-1L2T3	8	1 , 3 , 4 , 5 , 12 , 14 , 22 & 28
PCPF-11P-2L2T3	11	16, 20 , 22 , 23 , 30 THRU 36
PCPF-3P-1L2T3	3	14 , 18 & 21

SPECIFICATIONS

Current Rating . . . . . 5 Amperes
Dielectric Withstanding Voltage:
Contact to Contact
Sea Level . . . . . .1100 Volts
70,000 Feet. . . . . 375 Volts

CONTACTS:
Contact Material. . . . . Brass per QQ-B-613, 1/2 Hard, Composition 2
Contact Finish. . . . . .Gold Plated per MIL-G-45204, Type II, Class 1
Over Nickel Plate per QQ-N-290, Type VII, Class 1
(OTHER PLATINGS AVAILABLE UPON REQUEST)
Insulation Material. . . . . .Diallyl Phthalate per MIL-M-14, Type SDG-F, Color Black
Polarization. . . . . .The Utilization of Pilot PIN 1005064- Permits sixteen (16)
Possible Polarizing Positions

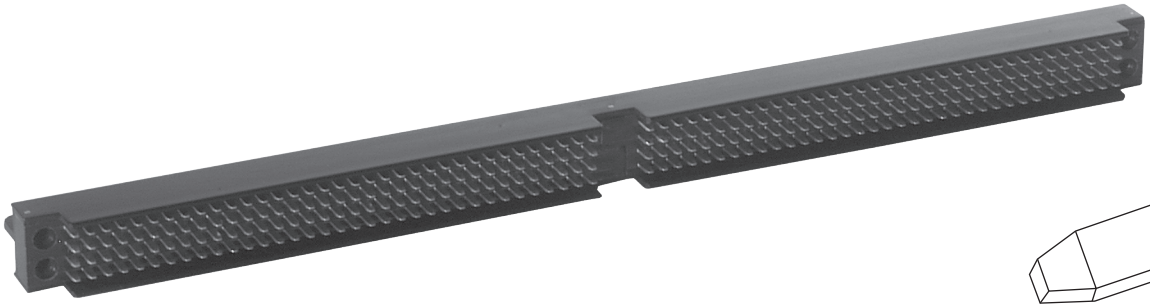

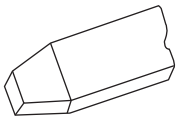

BLADE CONTACTS

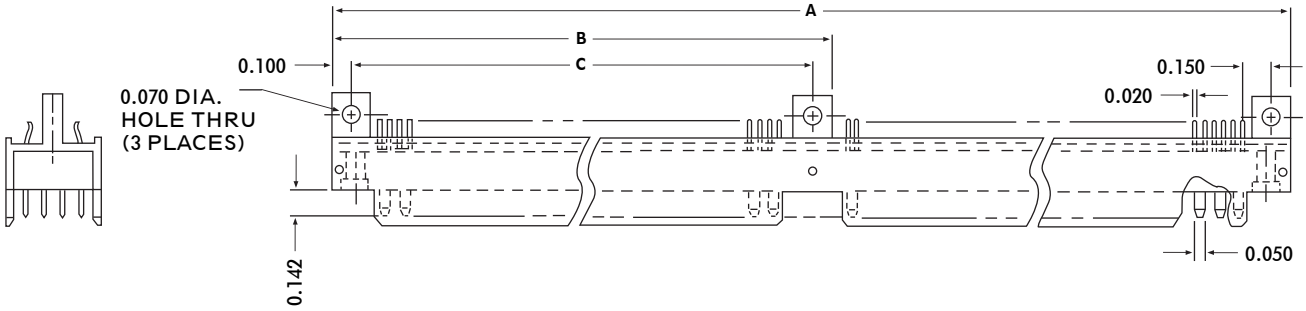

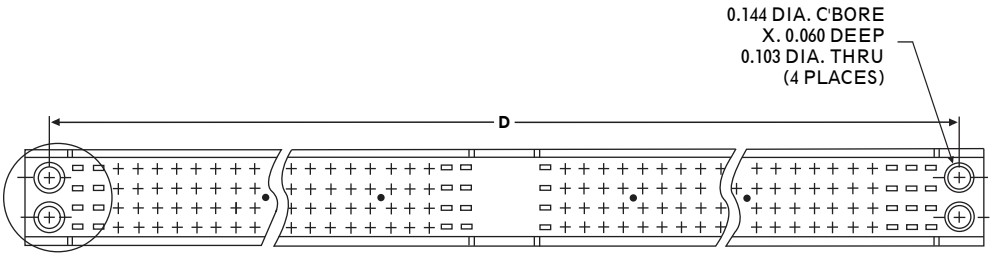

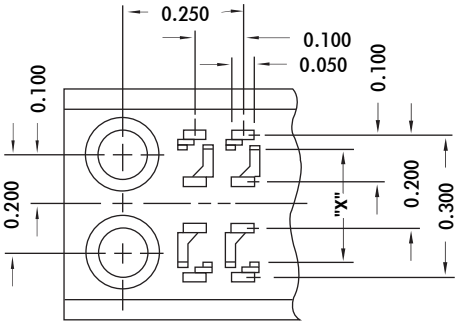

Transparent View as Seen
From Mating Side

GUIDE PINS

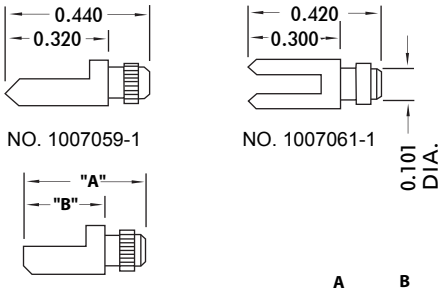

	A	B
NO. 1007060-1	.390	.270
NO. 1007060-2	.350	.230

PCPH-280P-1 L2FT3

- Contact Plating
- Hot Solder Dip
- Insulation Material
- Contact Style & Spacing
- Pin Contact
- Number of Contacts
- Shroud Style

FOR MECHANICAL AND ELECTRICAL SPECIFICATIONS SEE PAGE 45

CONTACTS

Bent	Straight
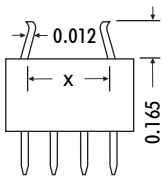	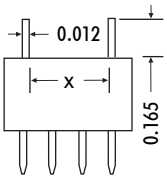

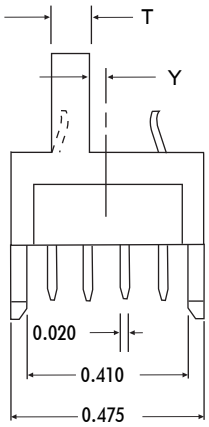

T	PART NO.	X	Y	X	A	B	C	D	
0.090	PCPHE-224P-1L2FT3	0.255	0.030		6.35		3.075	6.100	**
0.090	PCPHE-256P-1L2FT3	0.255	0.030		7.15		3.475	6.900	**
0.090	PCPHE-184P-2L2FT3	0.255	0.030		5.35		2.575	5.100	**
0.090	PCPHE-200P-2L2FT3	0.255	0.030		5.75		2.775	5.500	**
0.080	PCPHF-184P-1L2FT3	0.120	0.040		5.35		2.575	5.100	**

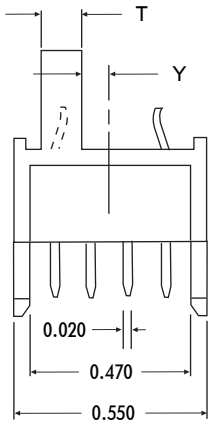

T	PART NO.	X	Y	X	A	B	C	D	
0.090	PCPHC-320P-1L2FT3	0.354	0.092		9.10		4.450	8.650	**
0.075	PCPHS-320P-1L2FT3	0.355	0.080		9.10		4.450	8.650	**

SPECIFICATIONS

Current Rating . . . . . 3 amperes
Dielectric Withstanding Voltage . . . . . 1500 Volts
Contact to Contact:
Sea Level . . . . . 1500 Volts
70,000 Feet . . . . . 375 Volts

CONTACTS:

Contact Material . . . . . Brass, per QQ-B-613, 1/2 Hard, Composition 2
Contact Finish . . . . . Gold Plate per MIL-G-45204, Type II, Class 1 over Nickel Plate per QQ-N-290, Type VII, Class 1
Shroud Material . . . . . Aluminum, per QQ-A-200, Alloy 6061-T6
Shroud Finish . . . . . Anodized, per MIL-A-8625, Type I, Class 2, Color Black
Insulation Material . . . . Diallyl Phthalate per MIL-M-14, Type SDG-F, Color Black

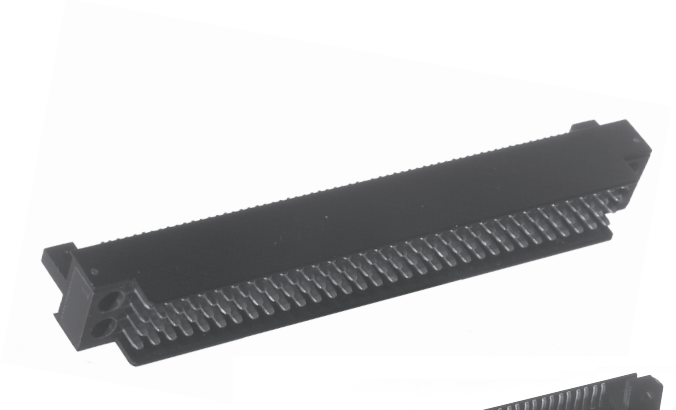

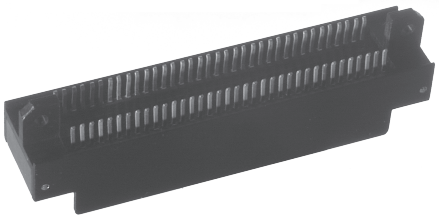

CONTACTS

Bent	Straight
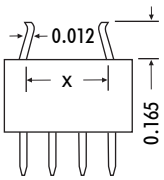	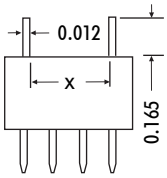

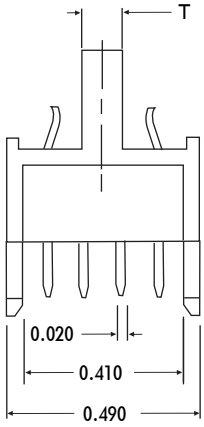

T	PART NO.	X	X	A	B	C	D	
0.102	PCPH-128P-11L2FT3		0.255		3.65	3.450	3.400	*
0.102	PCPH-140P-1L2FT3	0.255			3.95	3.750	3.700	*
0.102	PCPH-280P-1L2FT3	0.255		7.75		3.775	7.500	**
0.102	PCPH-280P-2L2FT3	0.269		7.75		3.775	7.500	**

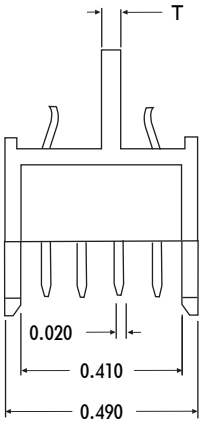

T	PART NO.	X	X	A	B	C	D	
0.060	PCPHA-280P-1L2FT3	0.290		7.75		3.775	7.50	**
0.060	PCPHA-56P-12L2FT3	0.269			2.05	1.850	1.600	*
0.045	PCPHJ-224P-1L2FT3	0.250		6.35		3.075	6.100	**
0.045	PCPHJ-224P-2L2FT3	0.290		6.35		3.075	6.100	**
0.060	PCPHA-72P-1L2FT3	0.290			2.25	2.050	2.000	*
0.060	PCPHA-280P-2L2FT3	0.255		7.75		3.775	7.50	**
0.060	PCPHN-280P-1L2FT3	0.306		7.75	3.97	3.775	7.50	**
0.060	PCPHN-280P-21L2FT3	0.306		7.75	3.97	3.775	7.50	**

* TWO MOUNTING TABS
** THREE MOUNTING TABS

CONTACTS

Bent

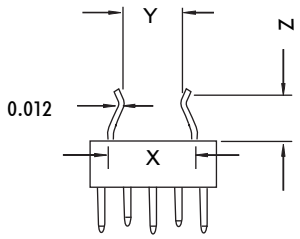

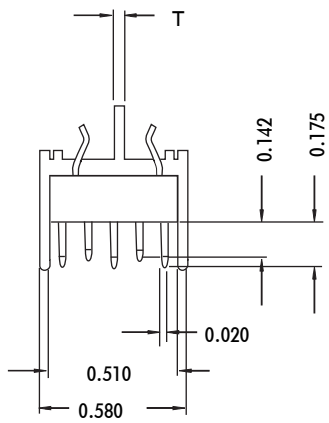

T	PART NO.	X	Y	Z	A	B	C	D	
0.060	PCPHR-175PM-3L2FT3	0.340	0.250	0.180	----	3.97	3.775	3.70	*
0.045	PCPHP-280P-3L2FT3	0.340	0.250	0.180	6.35	----	3.075	6.10	**
0.060	PCPHR-320P-3L2FT3	0.340	0.250	0.180	7.15	----	3.475	6.90	**
0.060	PCPHR-350P-3L2FT3	0.340	0.250	0.180	7.75	----	3.775	7.50	**
0.060	PCPHR-350P-5L2FT3	0.340	0.188	0.167	7.75	----	3.775	7.50	**

* **TWO MOUNTING TABS**

** **THREE MOUNTING TABS**

SPECIFICATIONS

Current Rating . . . . . 3 Amperes
Dielectric Withstanding Voltage:
Contact to Contact:
Sea Level . . . . . 1100 Volts
70,000 Feet . . . . . 375 Volts

CONTACTS:

Contact Material . . . . . Brass, per QQ-B-613, 1/2 Hard, Composition 2
Contact Finish . . . . . Gold Plate per MIL-G-45204, Type II, Class 1 over Nickel Plate per QQ-N-290, Type VII, Class 1
Shroud Material . . . . . Aluminum, per QQ-A-200, Alloy 6061-T6
Shroud Finish . . . . . Anodized, per MIL-A-8625, Type I, Class 2, Color Black
Insulation Material . . . . . Diallyl Phthalate per MIL-M-14, Type SDG-F, Color Black
Polarization. . . . . With the Utilization of Guide PIN 1007428-1 with the PCPHP, PCPHR, PCPHAE and PCPHR-280PR-series will Permit an Arrangement of (16) Possible Polarizing Combinations. (SEE PAGE 49 FOR GUIDE PINS)

PCPHP PCPHR SERIES

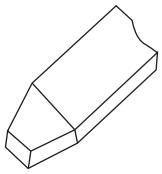

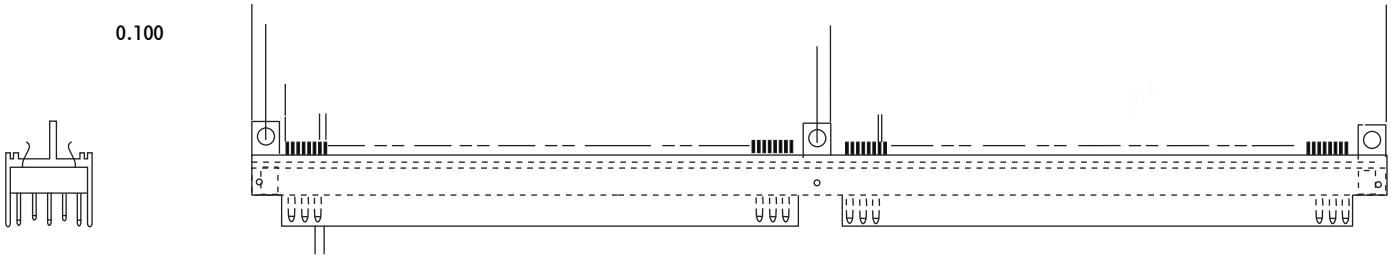

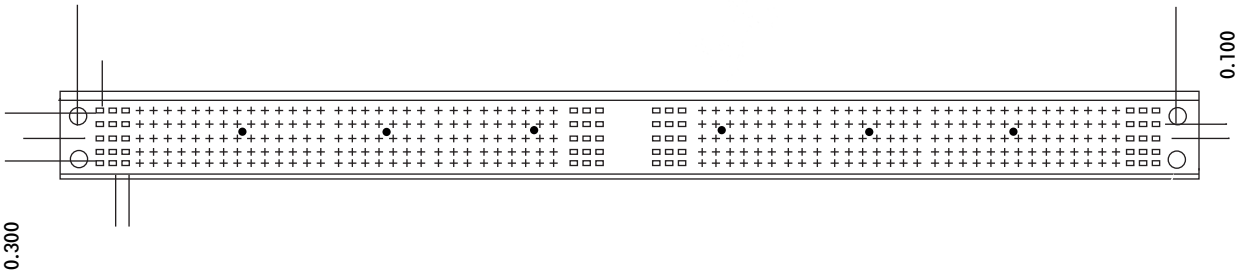

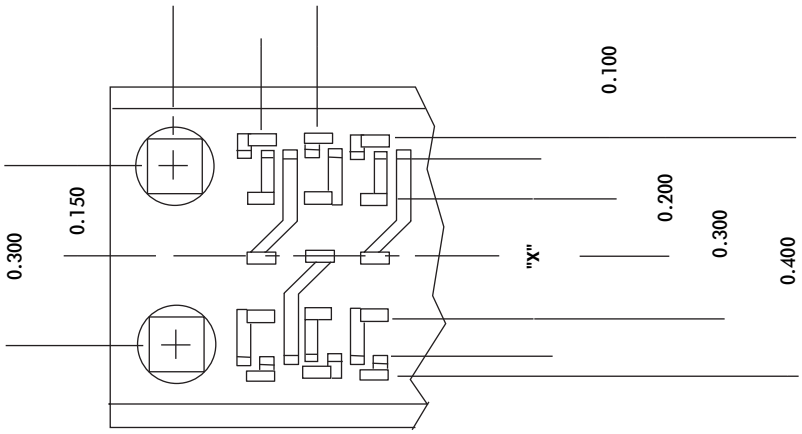

PCPHR-350P-3 L2FT3

- Contact Plating
- Contact Tails Hot Solder Dipped
- Insulation Material
- Contact Style & Spacing
- Pin Contact
- Number of Contacts
- Shroud Style

FOR MECHANICAL AND ELECTRICAL SPECIFICATIONS SEE PAGE 47

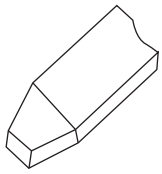

BLADE CONTACTS

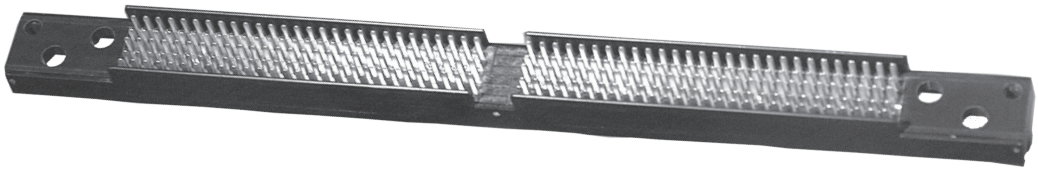

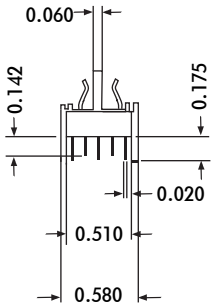

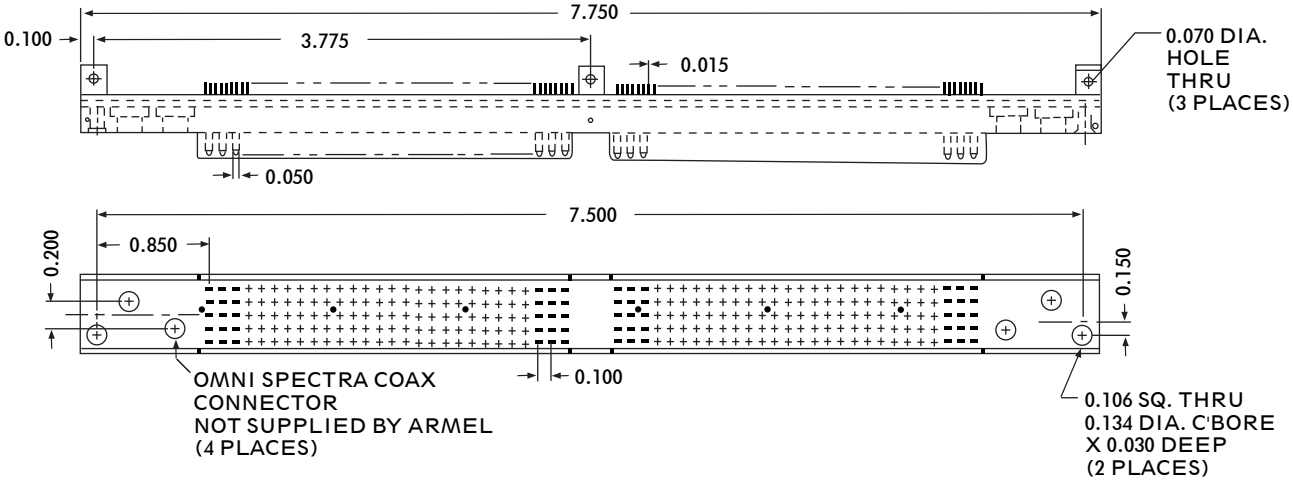

PCPHR-280PR-3L2FT3

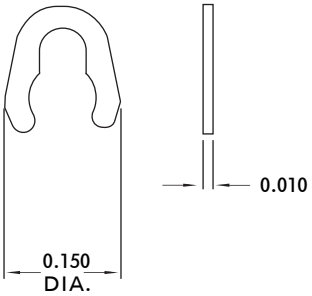

1007424-1

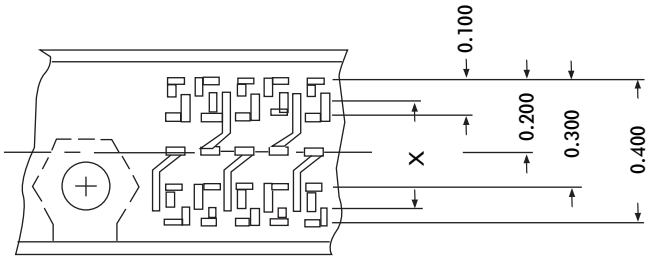

TRANSPARENT VIEW AS SEEN
FROM MATING SIDE

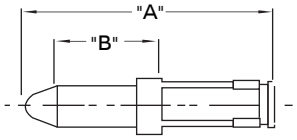

1007431-

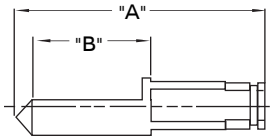

1007428-

PART NO.	A	B
1007428-1	0.520	0.250
1007428-2	0.550	0.280

PART NO.	A	B
1007431-1	0.662	0.360
1007431-2	0.852	0.550
1007431-3	1.002	0.700

FOR MECHANICAL AND ELECTRICAL SPECIFICATIONS SEE PAGE 45

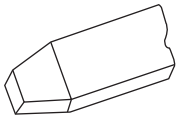

BLADE CONTACTS

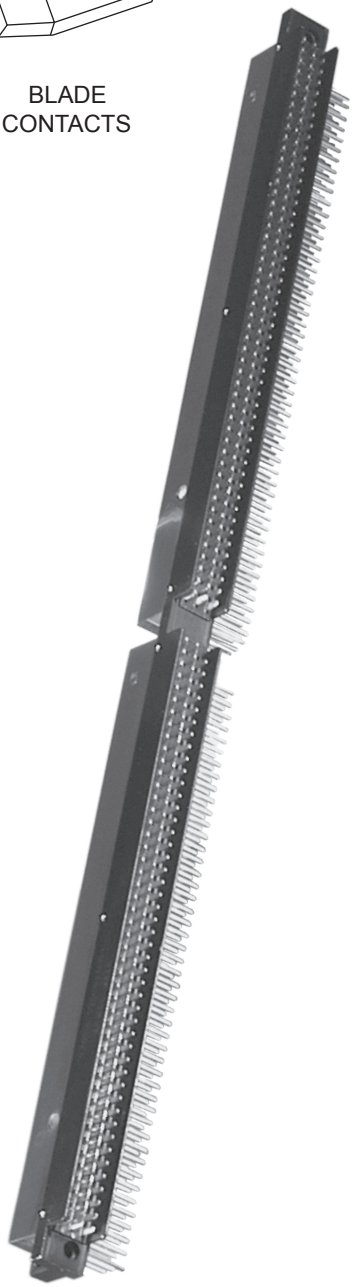

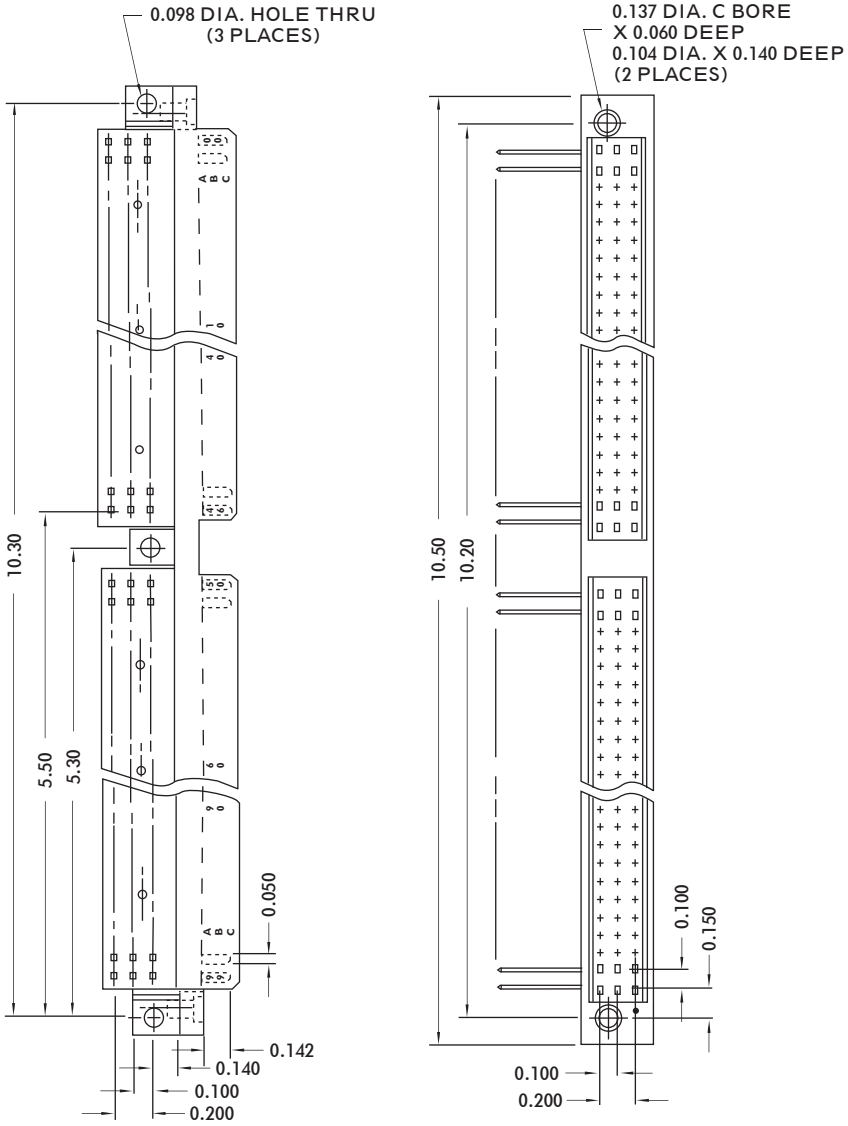

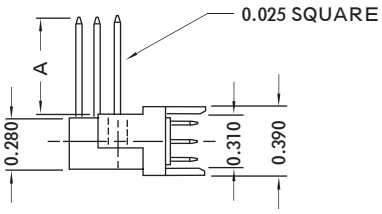

PART NUMBER	"A"
PCPHD-291P- 1L2T3	0.533
PCPHD-291P- 4L2T3	0.125

FOR MECHANICAL AND ELECTRICAL SPECIFICATIONS SEE PAGE 45

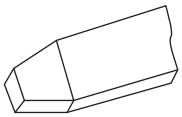

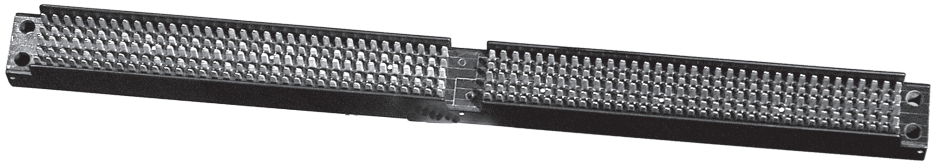

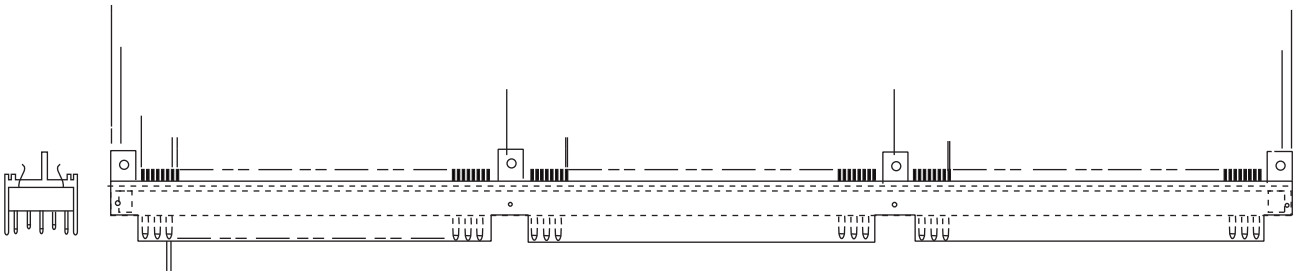

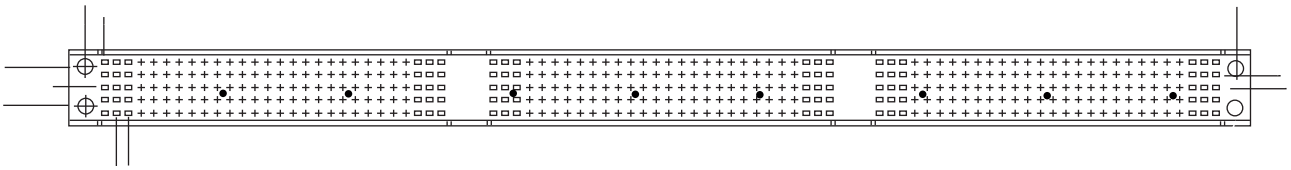

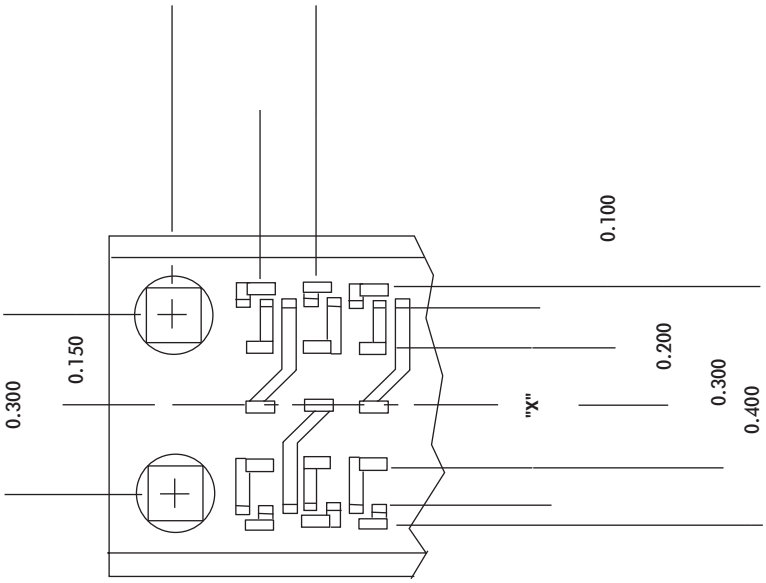

PCPHAE-420P-3 L2FT3

- Contact Plating
- Contact Tails Hot Solder Dipped
- Insulation Material
- Contact Style & Spacing
- Pin Contact
- Number of Contacts
- Shroud Style

FOR MECHANICAL AND ELECTRICAL SPECIFICATIONS SEE PAGE 47

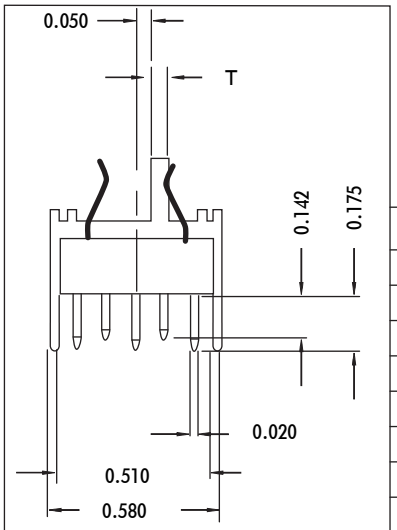

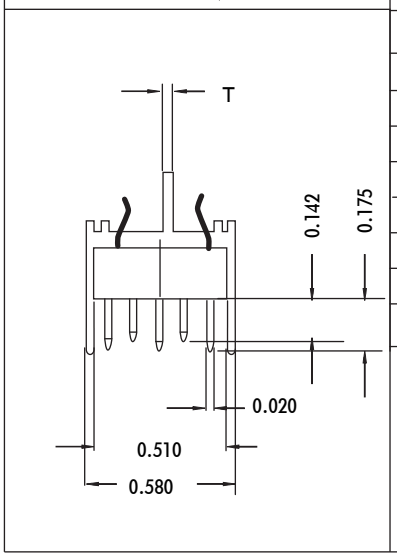

CONTACTS

Bent

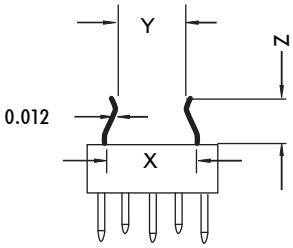

T	PART NO.	X	Y	Z	A	B	C	D	E	
0.060	PCPHAE-420P-3L2FT3	0.340	0.180	0.250	9.45	9.280	3.090	3.100	9.20	*

T	PART NO.	X	Y	Z	A	B	C	D	E	
0.060	PCPHR-400P-3L2FT3	0.340	0.250	0.180	9.050	8.850	2.875	3.100	8.80	*
0.060	PCPHR-420P-3L2FT3	0.340	0.250	0.180	9.450	9.250	3.075	3.100	9.20	*
0.045	PCPHP-420P-6L2FT3	0.340	0.275	0.180	9.450	9.250	3.075	3.100	9.20	*
0.045	PCPHP-450P-3L2FT3	0.340	0.250	0.180	10.050	9.850	3.075	3.700	9.80	*
0.045	PCPHP-490P-3L2FT3	0.340	0.250	0.180	10.850	10.650	3.775	3.100	10.60	*
0.045	PCPHP-520P-3L2FT3	0.340	0.250	0.180	11.450	11.250	3.775	3.700	11.20	*

* **FOUR MOUNTING TABS**

FOR MECHANICAL AND ELECTRICAL SPECIFICATIONS SEE PAGE 47

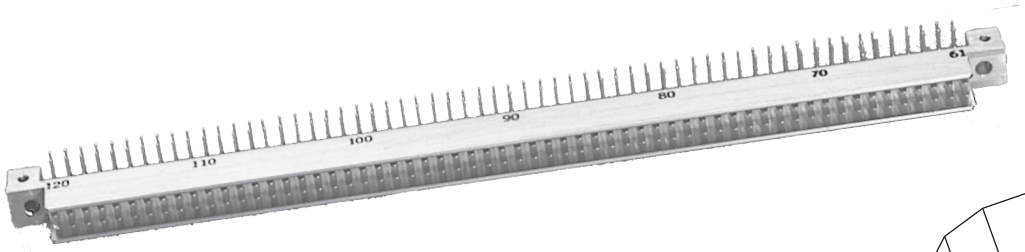

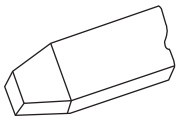

BLADE
CONTACTS

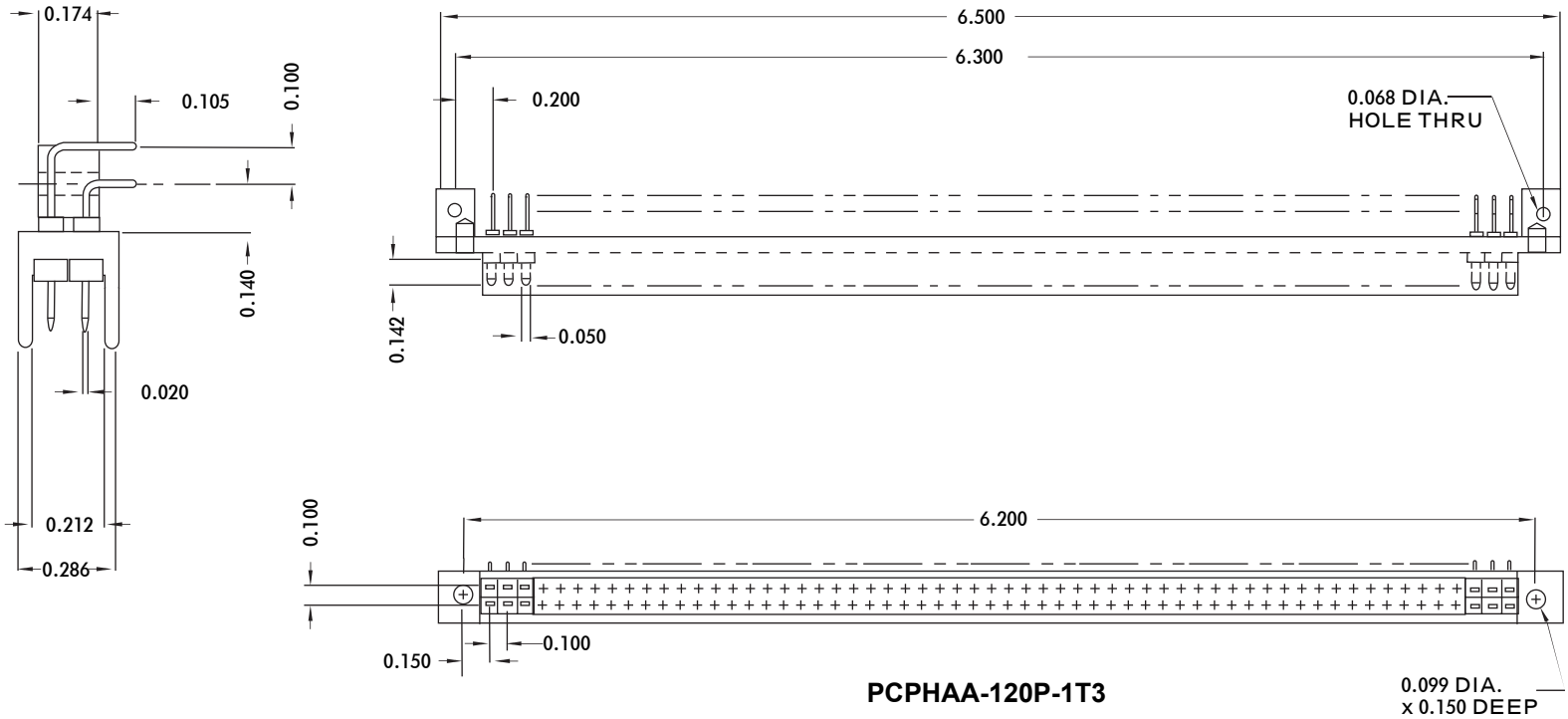

PCPHAA-120P-1T3

SPECIFICATIONS

Current Rating . . . . . 3 Amperes
Dielectric Withstanding Voltage:
Contact to Contact
Sea Level . . . . . 1000 Volts
70,000 Feet. . . . . 375 Volts

CONTACTS:
Contact Material. . . . . Brass per QQ-B-613, 1/2 Hard, Comp 2.
Contact Insulators. . . . . .Nylon 6-6, per MIL-M-20693
Shroud Material. . . . . .Aluminum, per QQ-A-200, Alloy 6063-T6
Contact Finish. . . . . .Gold Plated per MIL-G-45204, Type II, Class 1,
over Gold Plate per MIL-G-45204, Type I, Class 1,
over Nickel Plate per QQ-N-290, Type VII, Class 1
(OTHER PLATINGS AVAILABLE UPON REQUEST)
Shroud Finish. . . . . .Gold Chromate Conversion per MIL-C-5541

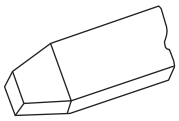

PART NO.	A	B
PCPHW-32P-1T3	2.150	1.970
PCPHW-42P-1T3	2.650	2.470

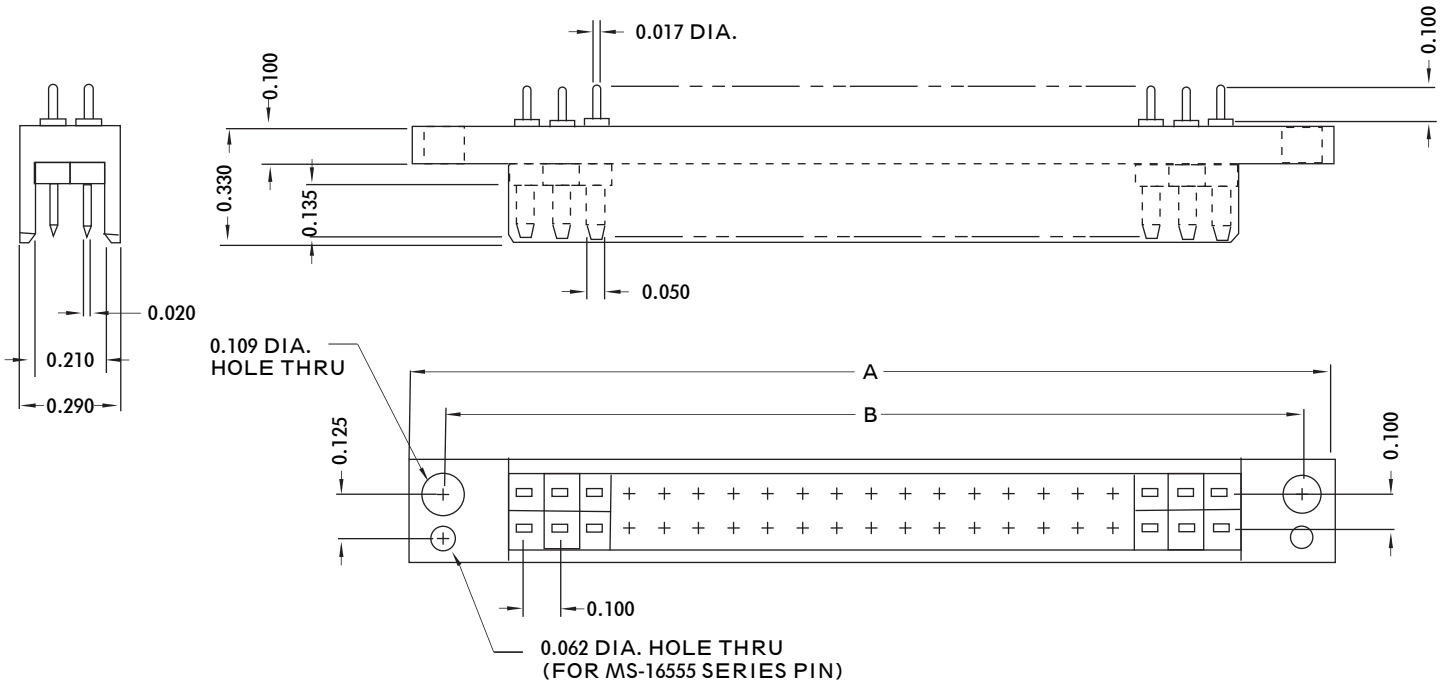

SPECIFICATIONS

Current Rating . . . . . 3 Amperes
Dielectric Withstanding Voltage:
Contact to Contact
Sea Level . . . . . .1000 Volts
70,000 Feet. . . . . 375 Volts

CONTACTS:
Contact Material. . . . . Brass per QQ-B-613, 1/2 Hard, Comp 2.
Contact Insulators. . . . . .Nylon 6-6, per MIL-M-20693
Shroud Material. . . . . .Aluminum, per QQ-A-200, Alloy 6061-T6
Contact Finish. . . . . .Gold Plated per MIL-G-45204, Type II, Class 1,
over Nickel Plate per QQ-N-290, Type VII, Class 1
(OTHER PLATINGS AVAILABLE UPON REQUEST)
Shroud Finish. . . . . Anodized per MIL-A-8625, Type II, Class 2, Color Black

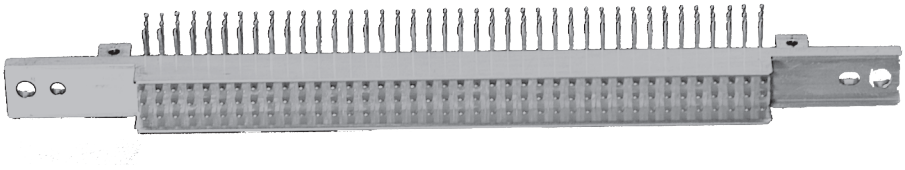

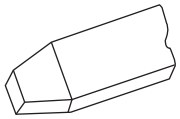

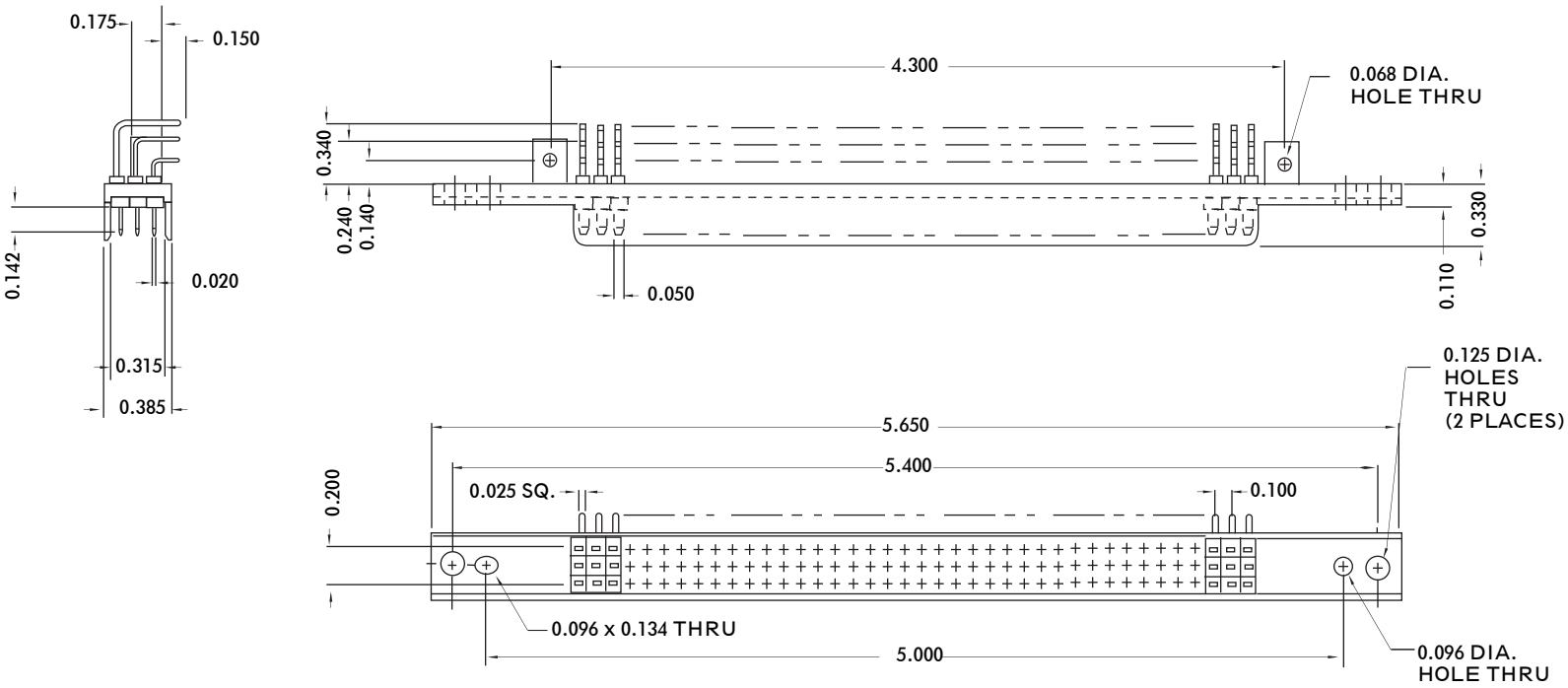

PCPHY-120P-1FT3

FOR MECHANICAL AND ELECTRICAL SPECIFICATIONS SEE PAGE 56

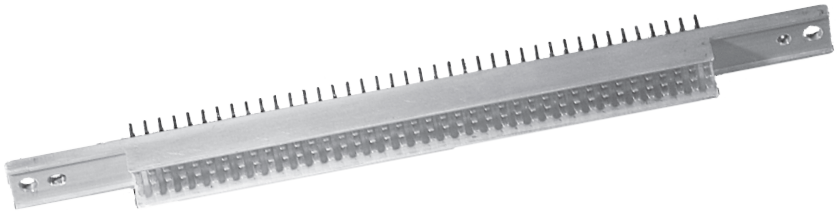

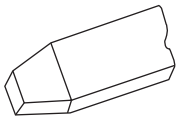

BLADE
CONTACTS

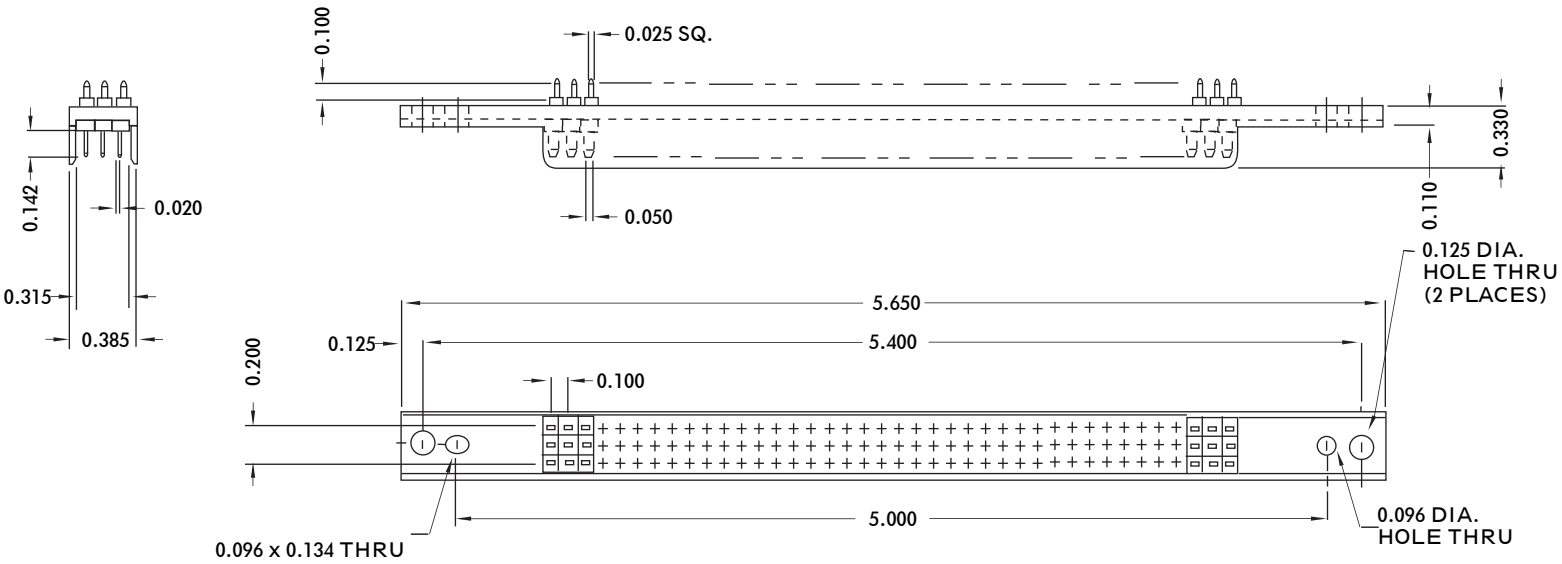

PCPHZ-120P-1FT3

SPECIFICATIONS

Current Rating . . . . . 3 Amperes
Dielectric Withstanding Voltage:
Contact to Contact
Sea Level . . . . . .1000 Volts
70,000 Feet. . . . . 375 Volts

CONTACTS:
Contact Material. . . . . Brass per QQ-B-613, 1/2 Hard, Composition 2
Contact Insulators. . . . . .Nylon 6-6 per MIL-M-20693
Shroud Material. . . . . .Aluminum, per QQ-A-200, Alloy 6061-T6
Contact Finish. . . . . .Gold Plated per MIL-G-45204, Type II, Class 1
Over Nickel Plate per QQ-N-290, Type VII, Class 1
Contact Tails. . . . . Hot Solder Dipped, 60/40 Tin Lead per QQ-S-571
(OTHER PLATINGS AVAILABLE UPON REQUEST)
Shroud Finish. . . . . Chemical Conversion Coating per MIL-C-5541, Clear
Colorless Finish

PCPHU- P & S SERIES

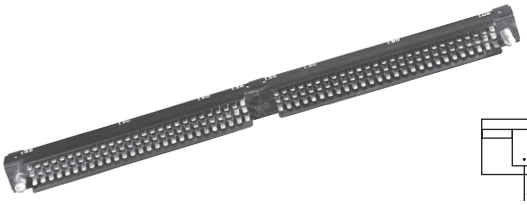

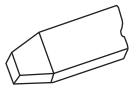

BLADE CONTACTS

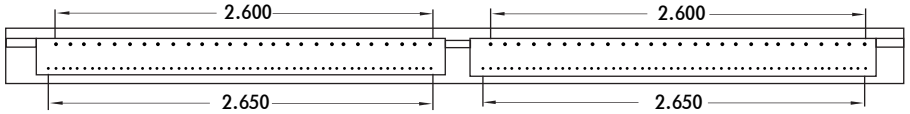

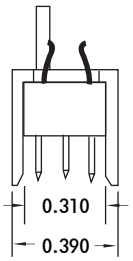

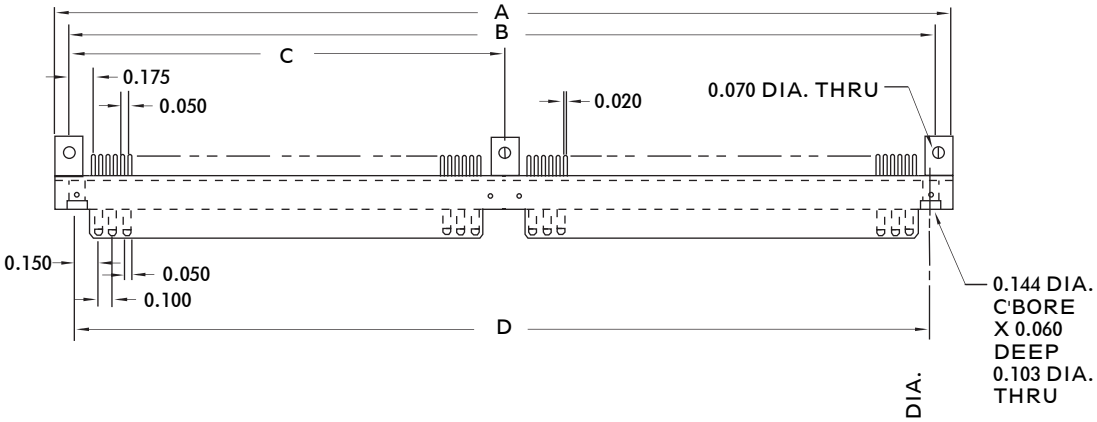

PCPHU 162 P -1 L2 T3

- Contact Plating
- Insulation Material
- Contact Style & Placing
- Pin Contact
- Number of Contacts
- Shroud Style

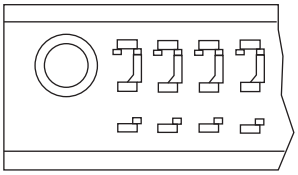

TRANSPARENT VIEW AS SEEN FROM MATING SIDE

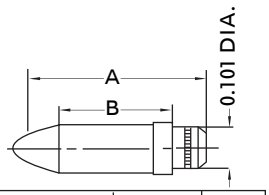

PART NO.	A	B
1007903-1	0.520	0.322

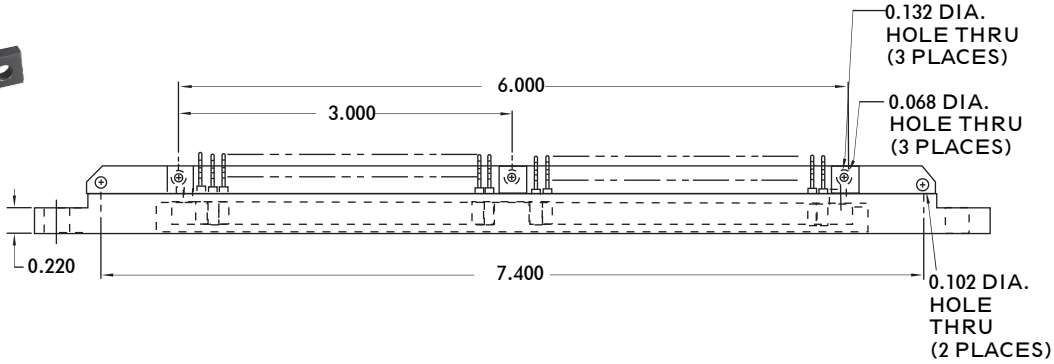

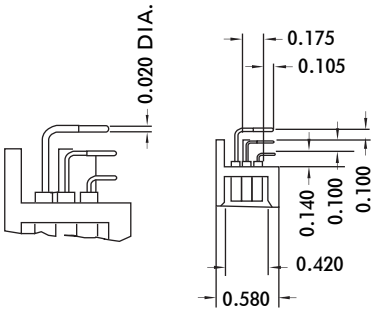

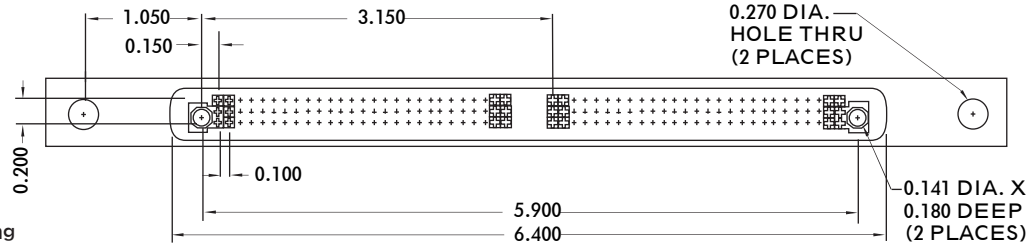

PCPHU 162S - 8 T7

- Contact Plating
- Contact Style & Placing
- Socket Contact
- Number of Contacts
- Shroud Style

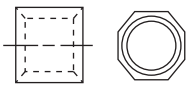

1007902-1

FOR MECHANICAL AND ELECTRICAL SPECIFICATIONS SEE PAGE 58

CONTACTS

Bent

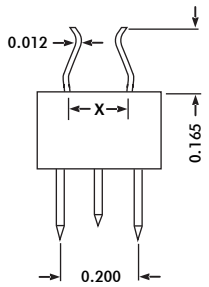

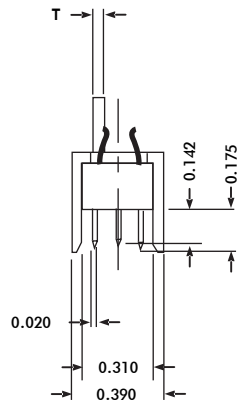

T	PART NO.	X		A	B	C	D
0.050	PCPHU-162P-1T7	0.154		6.200	6.000	3.000	5.90

SPECIFICATIONS

Current Rating . . . . . 3 Amperes
Contact to Contact
Sea Level . . . . . 1000 Volts
70,000 Feet. . . . . 375 Volts

CONTACTS:

Socket Contact Material. . . . . Beryllium Copper per QQ-B-530, Comp A. Contacts are Low Force Insertion & Withdrawal per MIL-C-28754
Pin Contact Material. . . . . Brass per QQ-B-613, 1/2 Hard, Composition 2
Contact Insulators. . . . . .Nylon per MIL-M-20693
Shroud Material. . . . . .Aluminum, per QQ-A-200, Alloy 6061-T6
Socket Contact Finish. . . . . .Gold Plated per MIL-G-45204, Type II, Class 1, over Gold Plate per MIL-G-45204, Type I, Class 1, over Nickel Plate per QQ-N-290, Type VII, Class 1
Pin Contact Finish. . . . . .Gold Plate per MIL-G-45204, Type II, Class 1 Over Nickel Plate per QQ-N-290, Type VII, Class 1 (Low Stress Nickel) (OTHER PLATINGS AVAILABLE UPON REQUEST)
Shroud Finish. . . . . Anodized per MIL-A-8625, Type II, Class 2, Color Black

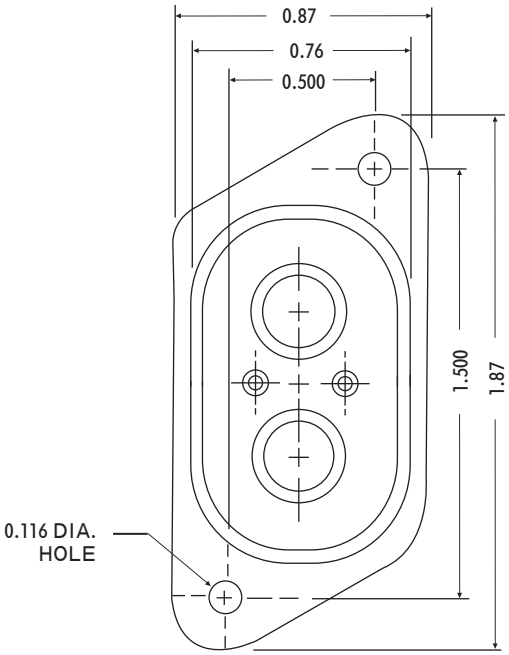

HA-2P-4PH-1L2V2

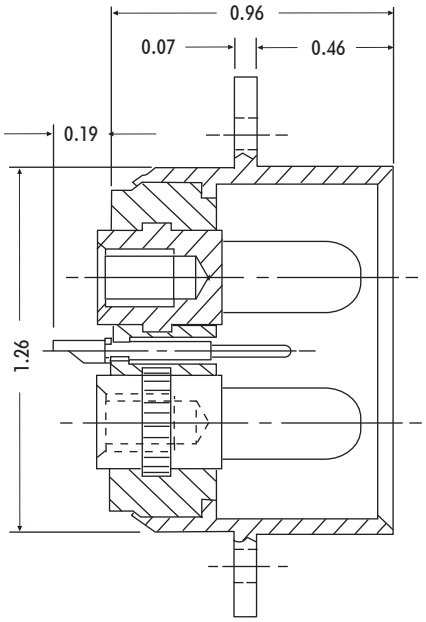

SPECIFICATIONS

Large Contacts
- Current Rating . . . . . 75 Amperes and/or 100 Amperes
- Contact Size . . . . . 0.250 Inch, No. 4; 0.290 Inch No.2
- Material . . . . . Beryllium Copper, per QQ-C-530
- Pin Contact . . . . . Molded-In, No. 10-32 thd. 0.250 min.full
- Socket Contact . . . . . Removable, Poke Home, Solder-Cup
- Removing Tool . . . . . No. T9090-1

Small Contacts
- Current Rating . . . . . 7.5 Amperes
- Contact Size . . . . . 0.040 Inch
- Pin Contact . . . . . Solder-Cup, Brass per QQ-B-626
- Socket Contact . . . . . Crimp Removable, Phosphor Bronze per QQ-B-750
- Closed Entry Sleeve . . . . . Brass, per QQ-B-626
- Retaining Clip . . . . . Stainless Steel, Passivated per QQ-S-766
- Terminal Accommodation . . . . . One no. 18, One no. 20, One or Two no. 22, Two or Three no. 24, AWG Wire
- Removing Tool . . . . . No. T9066-1
- Crimping Tool . . . . . No. MS 3191A
- Positioner . . . . . No. 612192

Contact Plating . . . . . Gold Plated (0.000050 inch) per MIL-G-45204, Type II, Class I, Grade B over Copper Plate per MIL-C-14550, Class 2 (OTHER PLATINGS ALSO AVAILABLE UPON REQUEST)

Shell Material . . . . . Aluminum per QQ-A-200, Anodized Color Gold

Floating Eyelets . . . . . Stainless Steel, Passivated

Insulation Material . . . . . Diallyl Phthalate per MIL-M-14, Type SDG-F Color Black

HA-2SCK-2SH-1L2V2

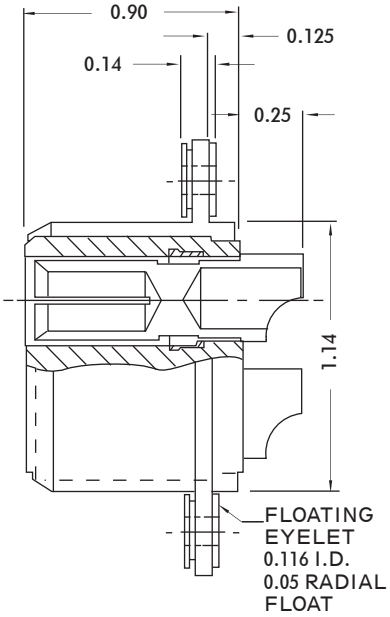

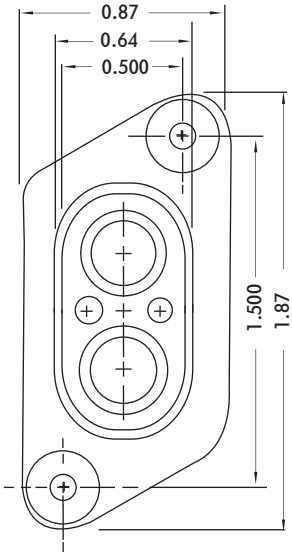

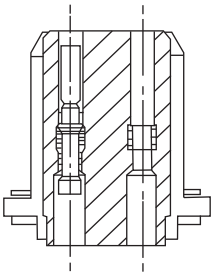

Crimp
Removable Contacts

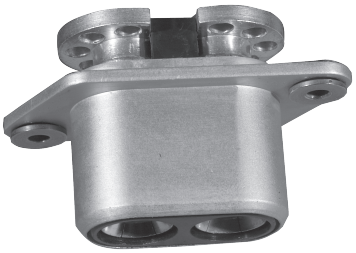

HA-2SCKD-9-2SH-1L2V2

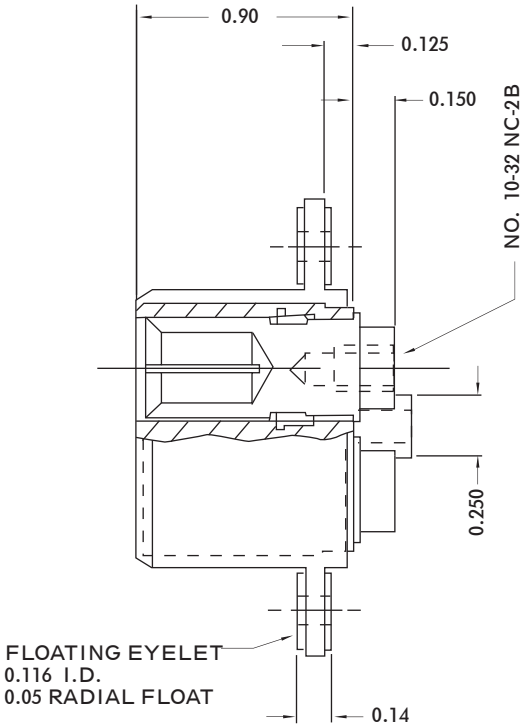

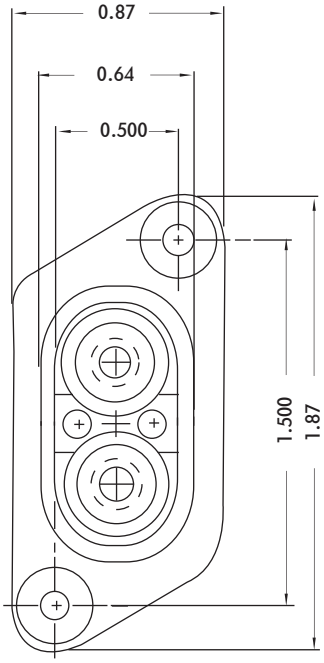

FOR TOOLS AND ACCESSORIES SEE PAGE 61
FOR MECHANICAL AND ELECTRICAL SPECIFICATIONS SEE PAGE 59

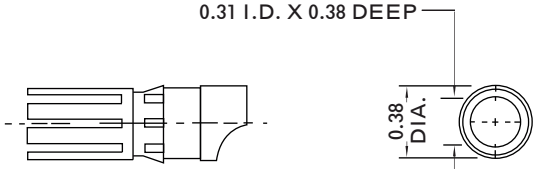

CONTACT NO. 1005841-1V2

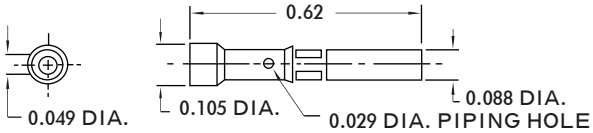

CONTACT NO. 1007003-1V2

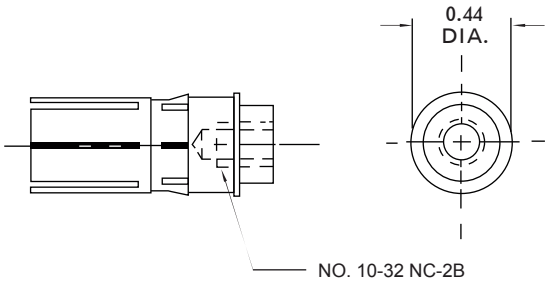

CONTACT NO. 1005982-1V2 OR T3
(100 AMP CONTACT)

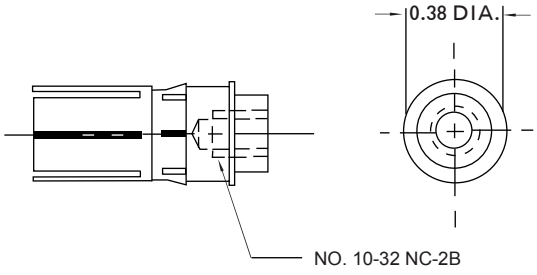

CONTACT NO. 1005881-1V2 OR T3
(75 AMP CONTACT)

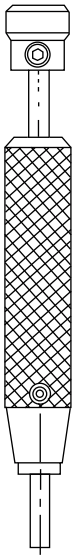

Removing Tool
No. T9066-1

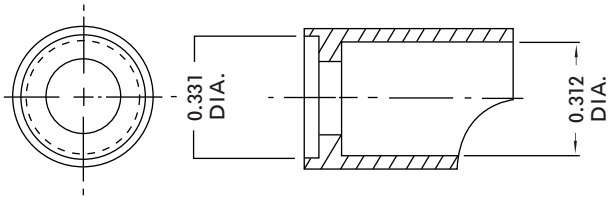

ADAPTER TO BE USED WITH CONTACT NO. 1005881-1V2.

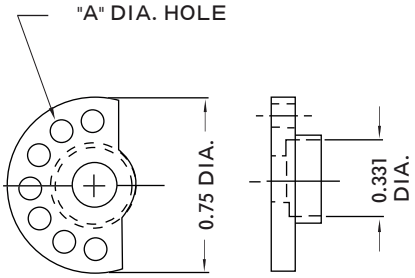

CAN BE MOUNTED TO CONTACT NO.
1005881-1V2 OR 1005982-1V2
FOR MULTIPLE WIRE CONNECTIONS

PART NO'S.	"A"	AMOUNT OF HOLES
1005882V2	0.098	7
1005887-1V2	0.136	3
1005888-1V2	0.136	5

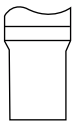

Removing Tool
No. T9090-1

FOR MECHANICAL AND ELECTRICAL SPECIFICATIONS SEE PAGE 59

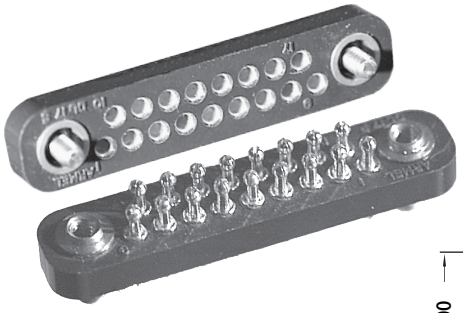

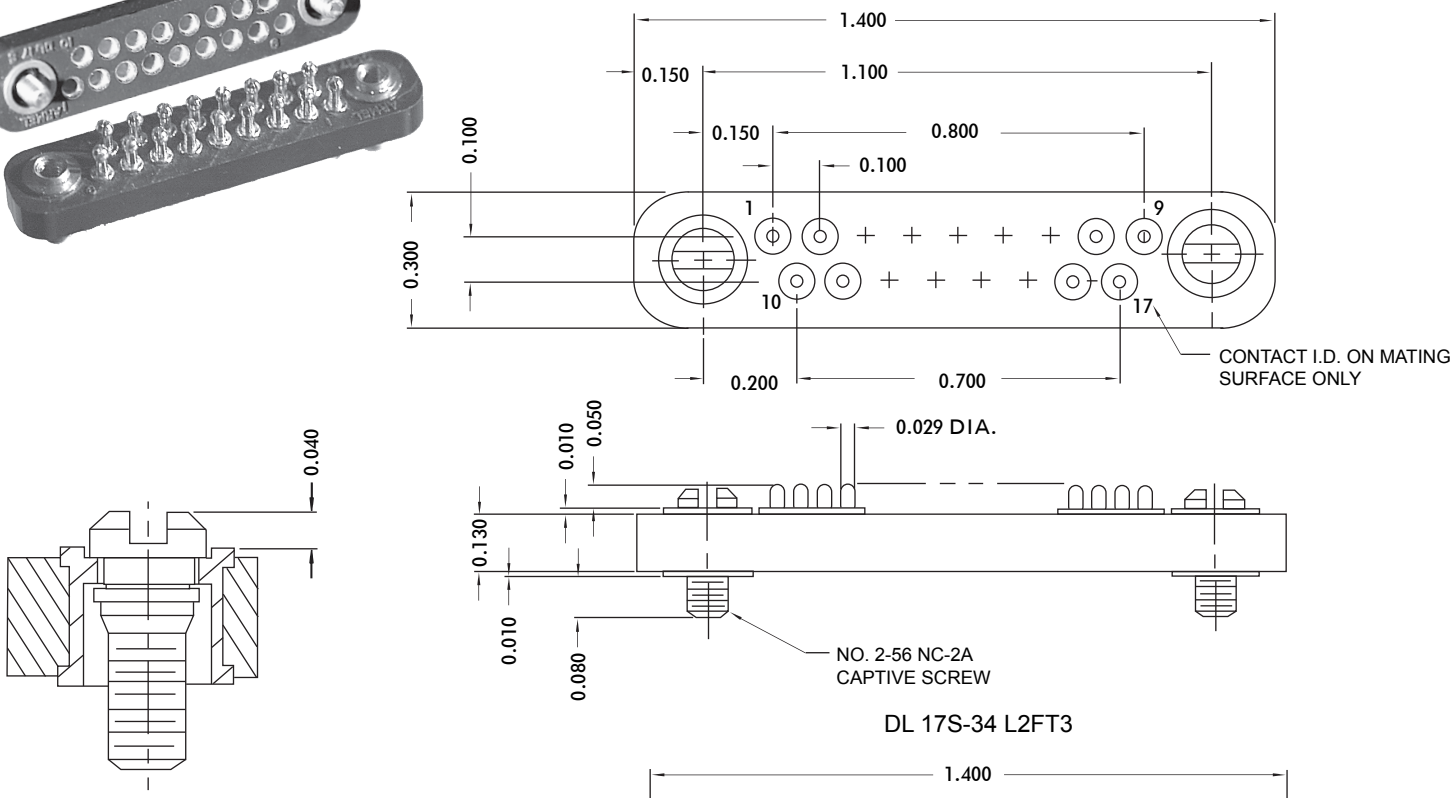

DL 17S-34 L2FT3

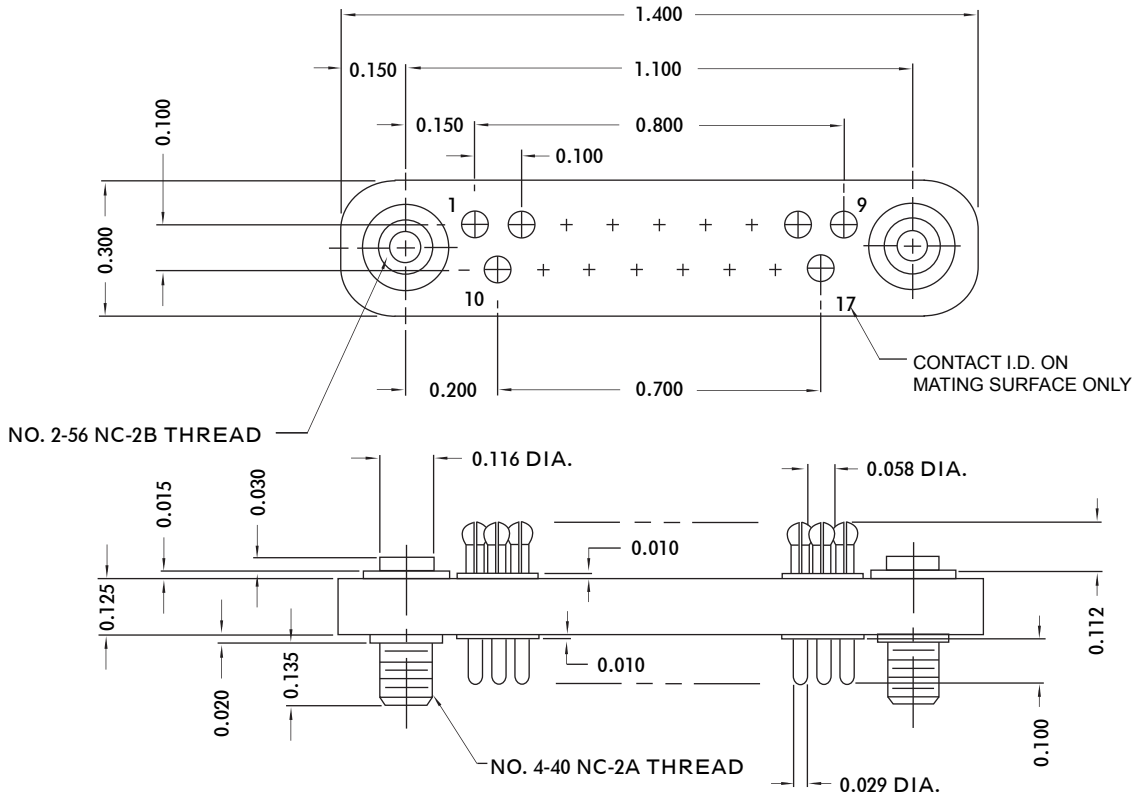

DL 17P-22 L2FT3

FOR MECHANICAL AND ELECTRICAL SPECIFICATIONS SEE PAGE 63

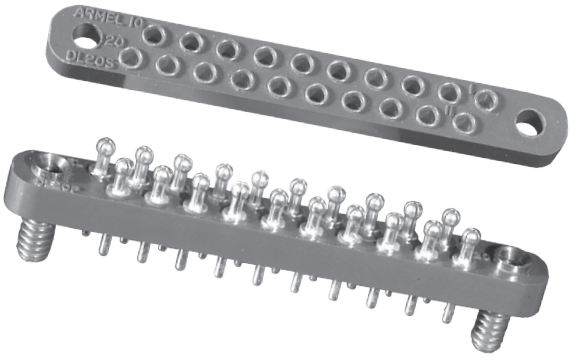

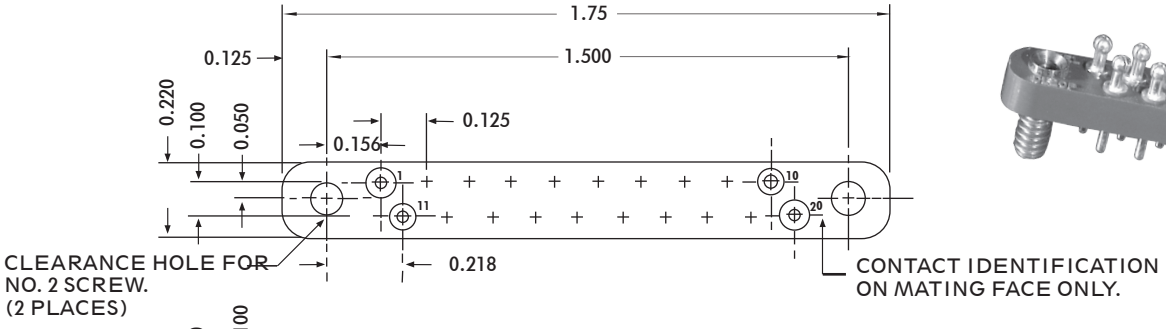

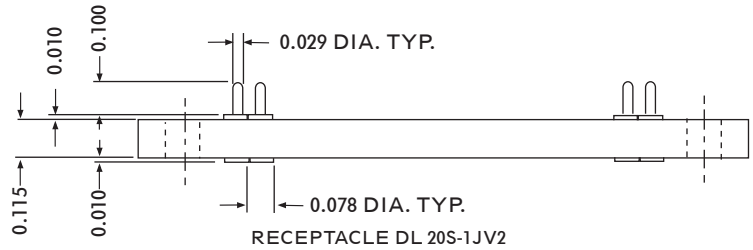

RECEPTACLE DL 20S-1JV2

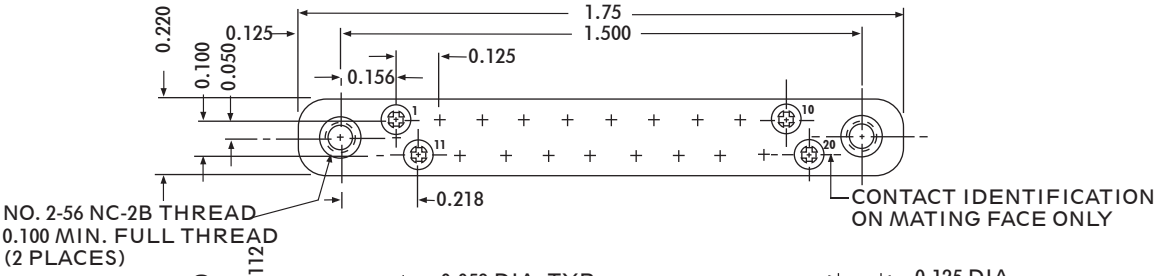

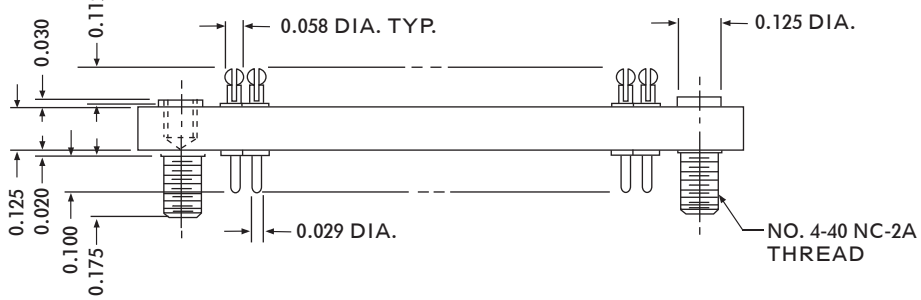

PLUG DL 20P-1JV2

SPECIFICATIONS

Contact Rating

Socket Contacts	Brass, 1/2 Hard per QQ-B-626
Pin Contacts	Beryllium Copper, per QQ-C-530, Condition A
Contact Finish	Gold Plated (0.00005 Inch) per MIL-G-45204, Type II, Class I over Copper Plate
Insulation Material	Diallyl Phthalate, Glass Filled per MIL-M-14, Type GDI-30F
Mounting Hardware	Stainless Steel, Passivated per QQ-P-35
Retaining Rings (DL74)	Beryllium Copper, Cadmium Plated per QQ-P-416, Type II, Class 2

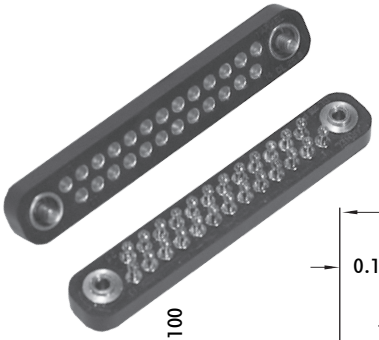

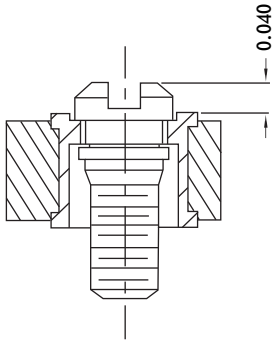

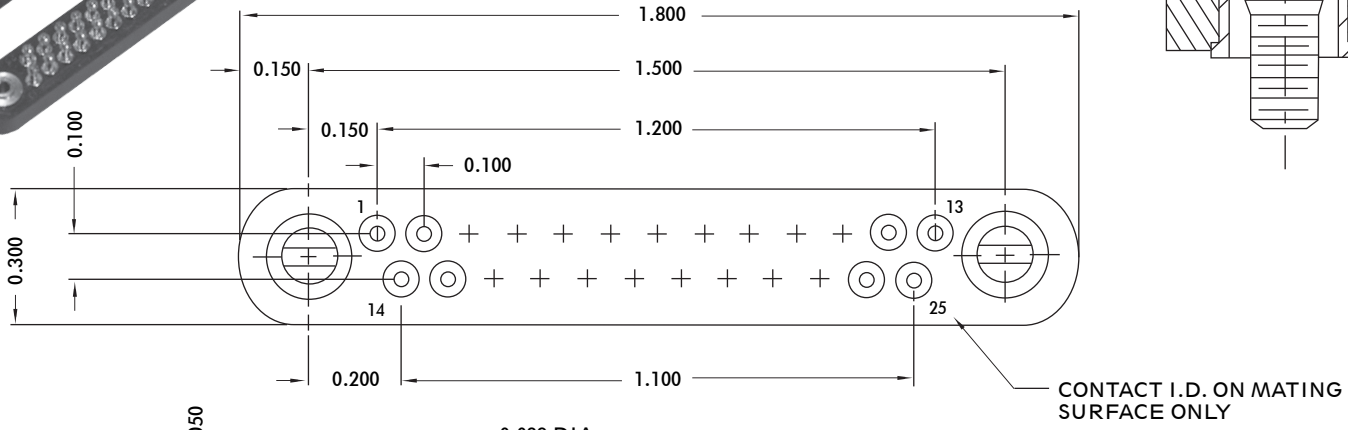

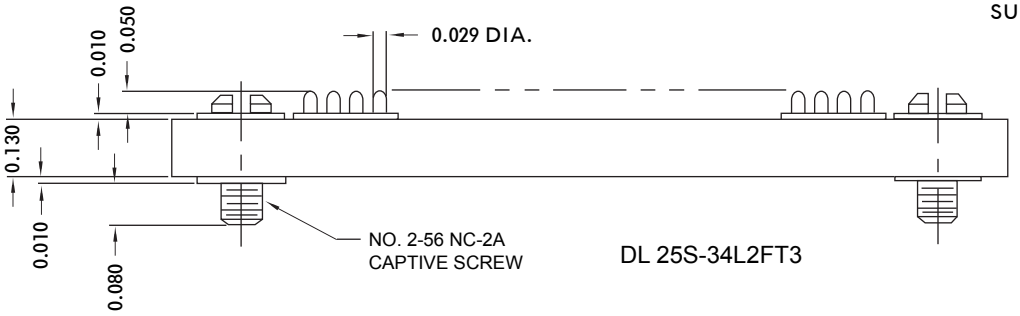

DL 25S-34L2FT3

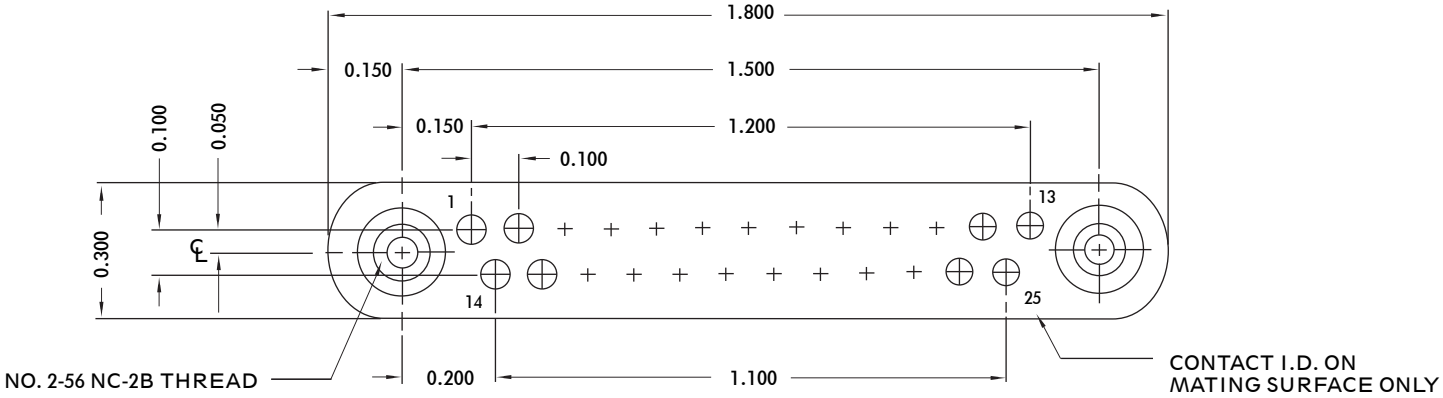

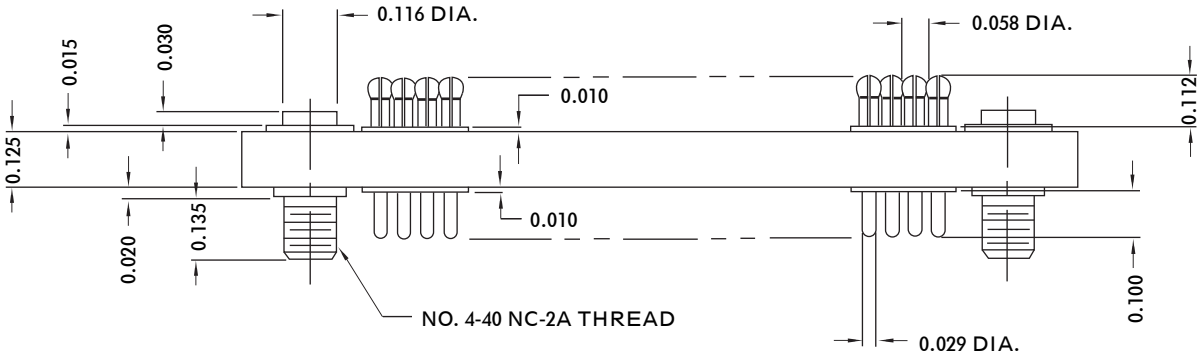

DL 25P-22L2FT3

FOR MECHANICAL AND ELECTRICAL SPECIFICATIONS SEE PAGE 63

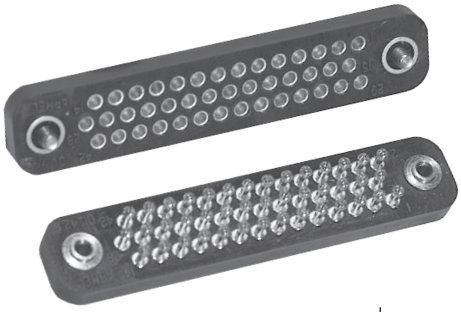

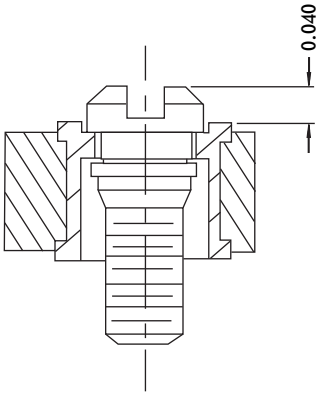

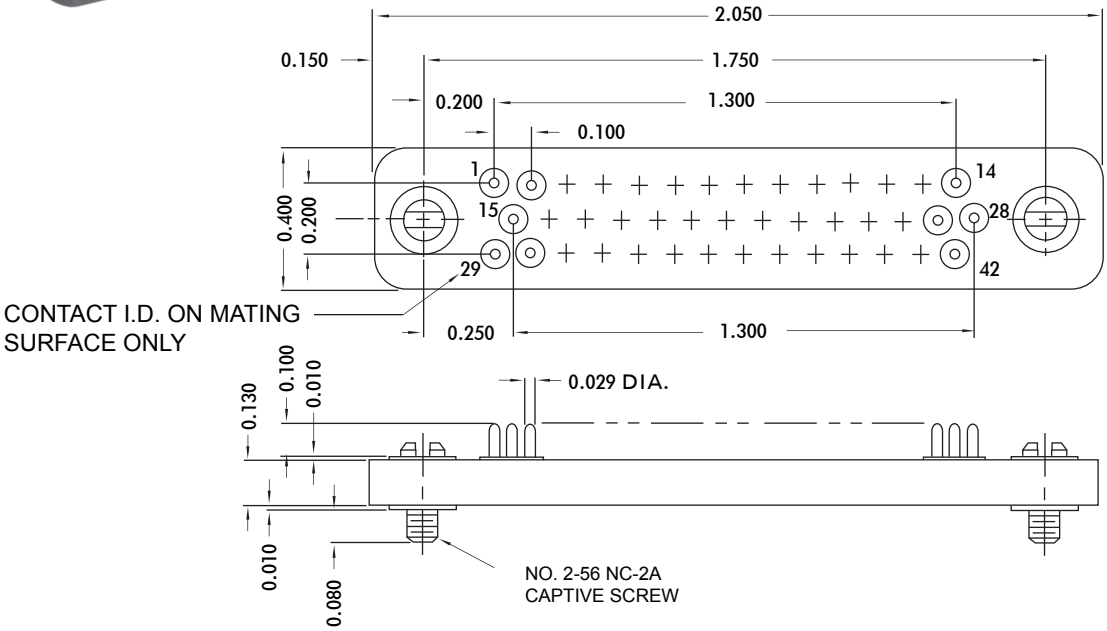

DL 42S-34L2FT3

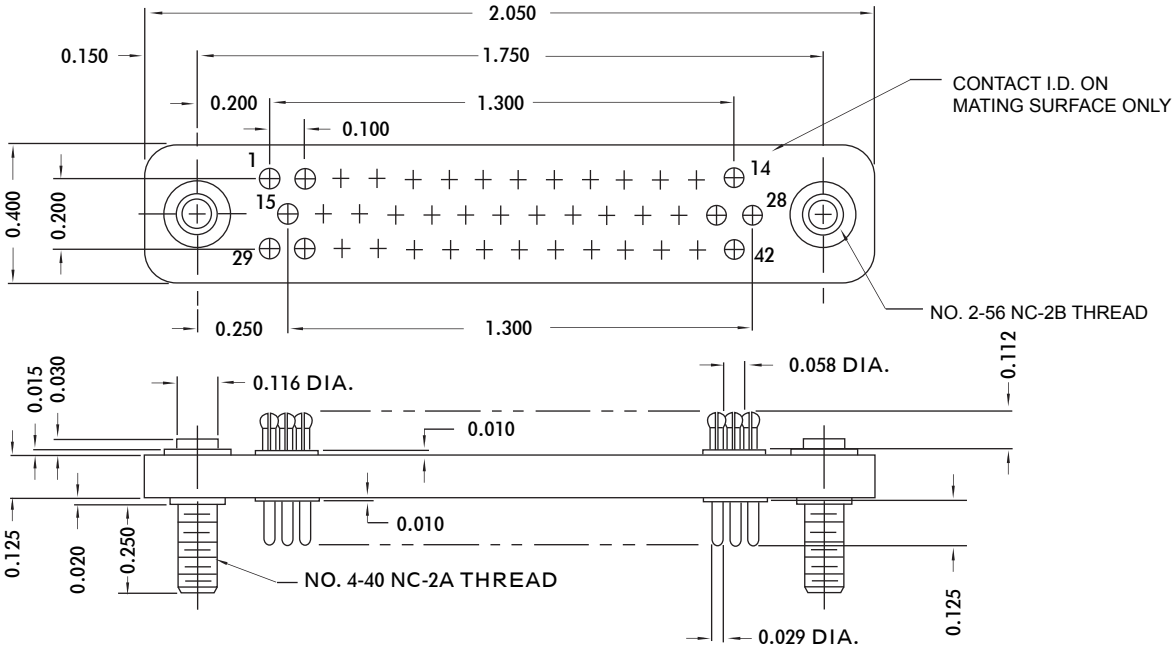

DL 42P-22L2FT3

FOR MECHANICAL AND ELECTRICAL SPECIFICATIONS SEE PAGE 63

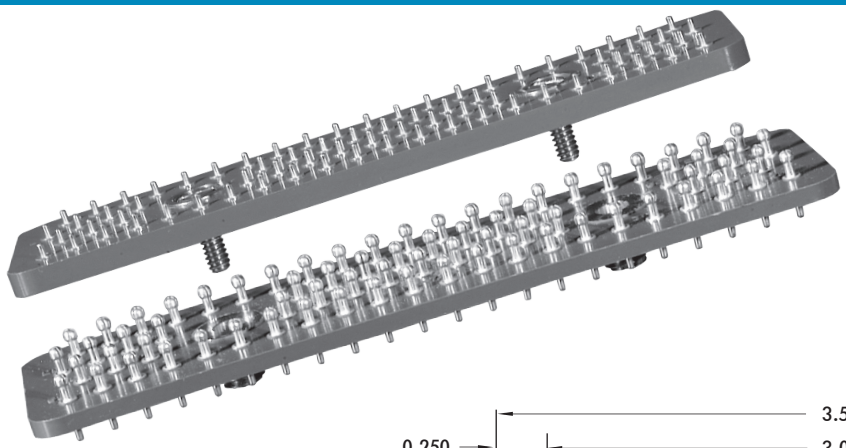

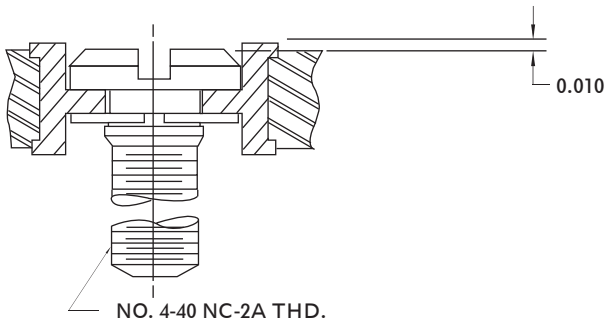

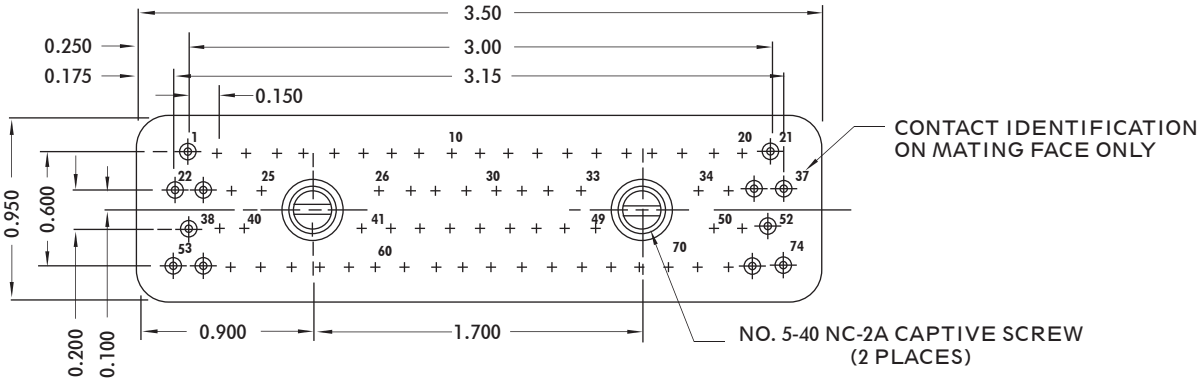

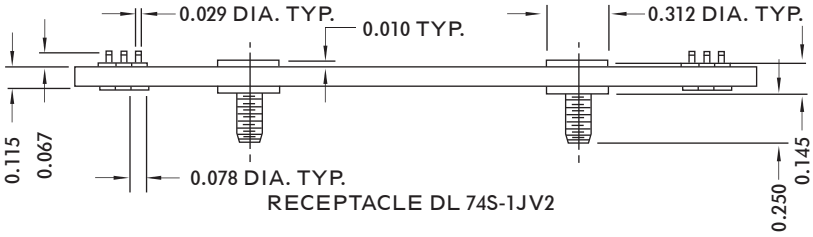

RECEPTACLE DL 74S-1JV2

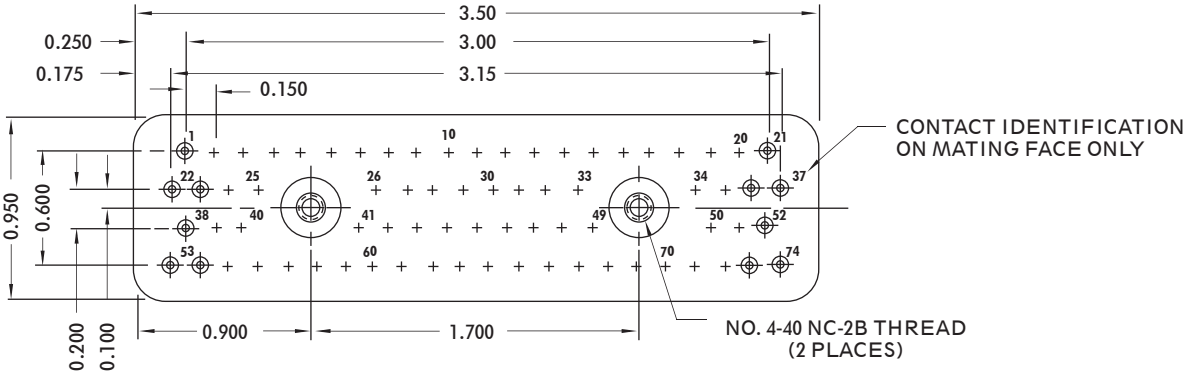

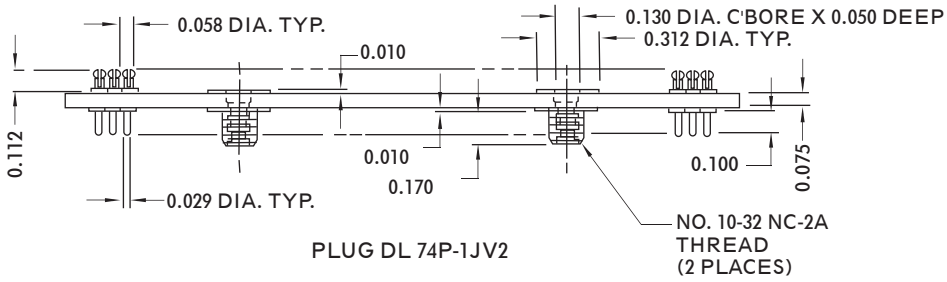

PLUG DL 74P-1JV2

FOR MECHANICAL AND ELECTRICAL SPECIFICATIONS SEE PAGE 63

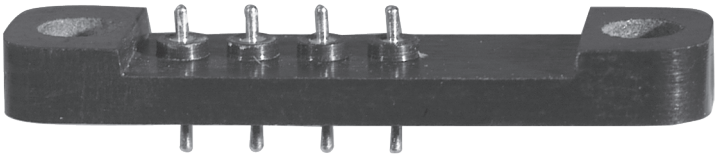

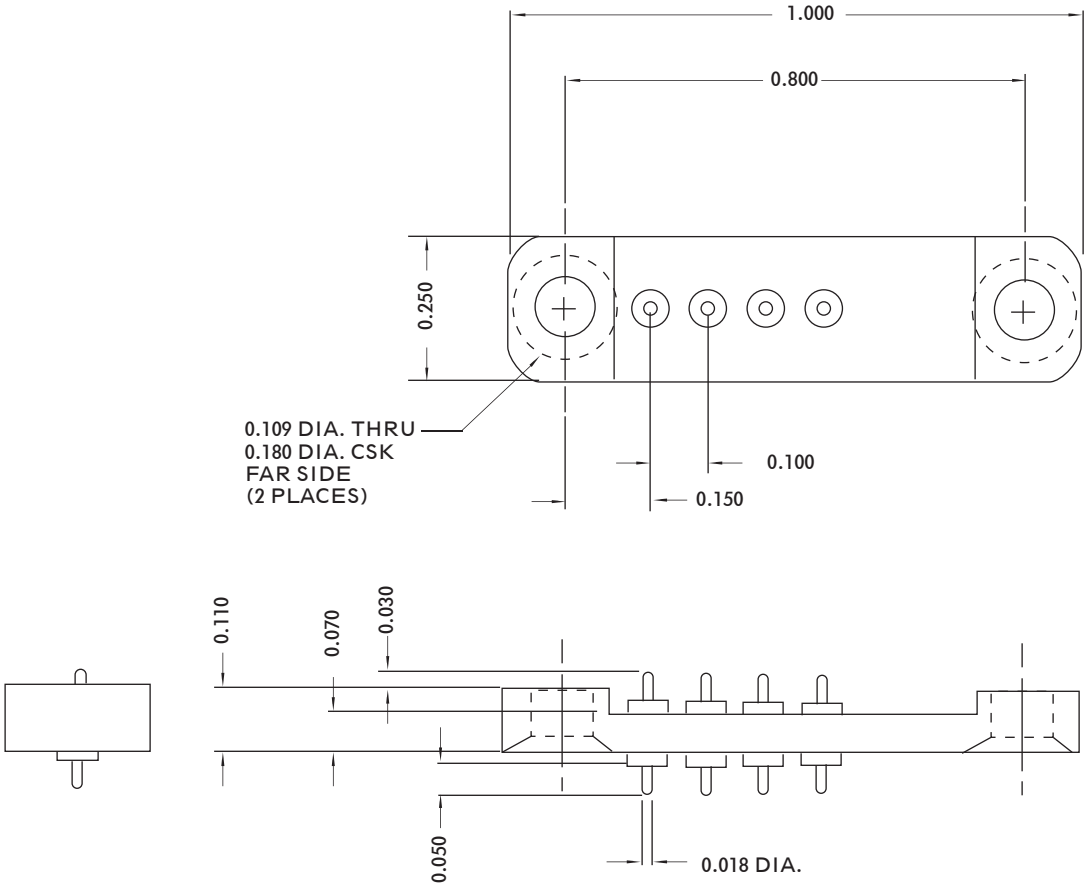

DPC-4-L2T3

FOR MECHANICAL AND ELECTRICAL SPECIFICATIONS SEE PAGE 68

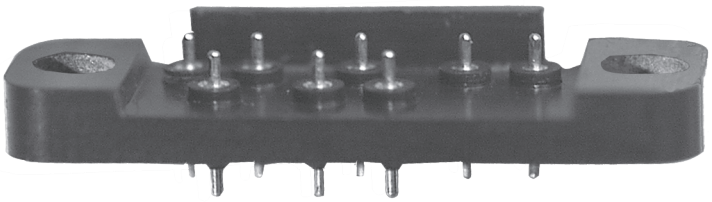

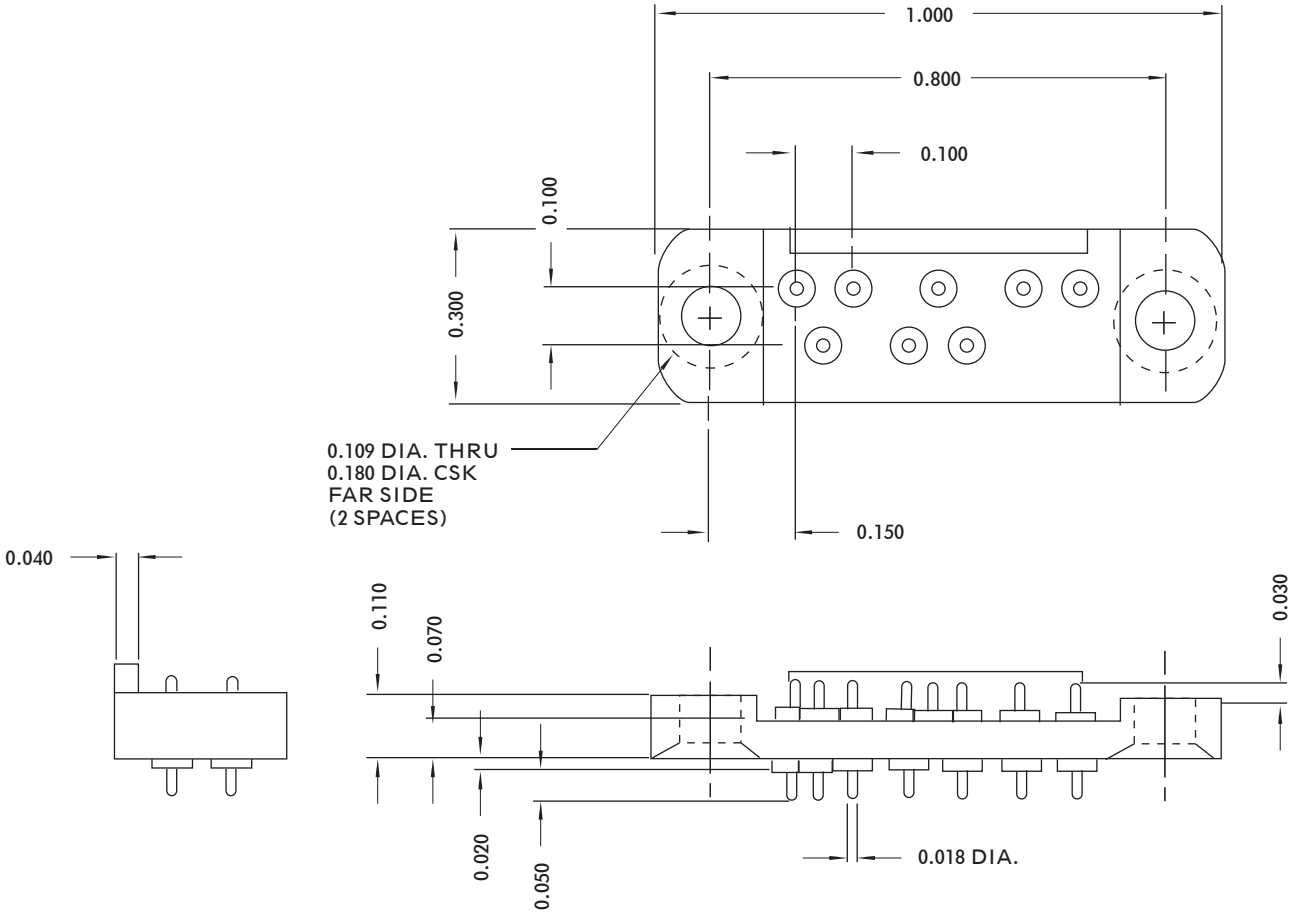

DPC-8L2T3

SPECIFICATIONS

Current Rating . . . . . 1 Ampere
Dielectric Withstanding Voltage . . . . . 500 Volts

CONTACTS :
Contact Material . . . . . Brass. Per ASTM-B-16/16M
Contact Finish . . . . . Gold Plated per MIL-G-45204, Type II, Class 1
Over Nickel Plate per QQ-N-290, Type VII, Class 1
Insulation Material . . . . . Diallyl Phthalate per MIL-M-14, Type SDG-F, Color Black

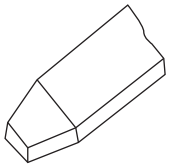

BLADE
CONTACTS

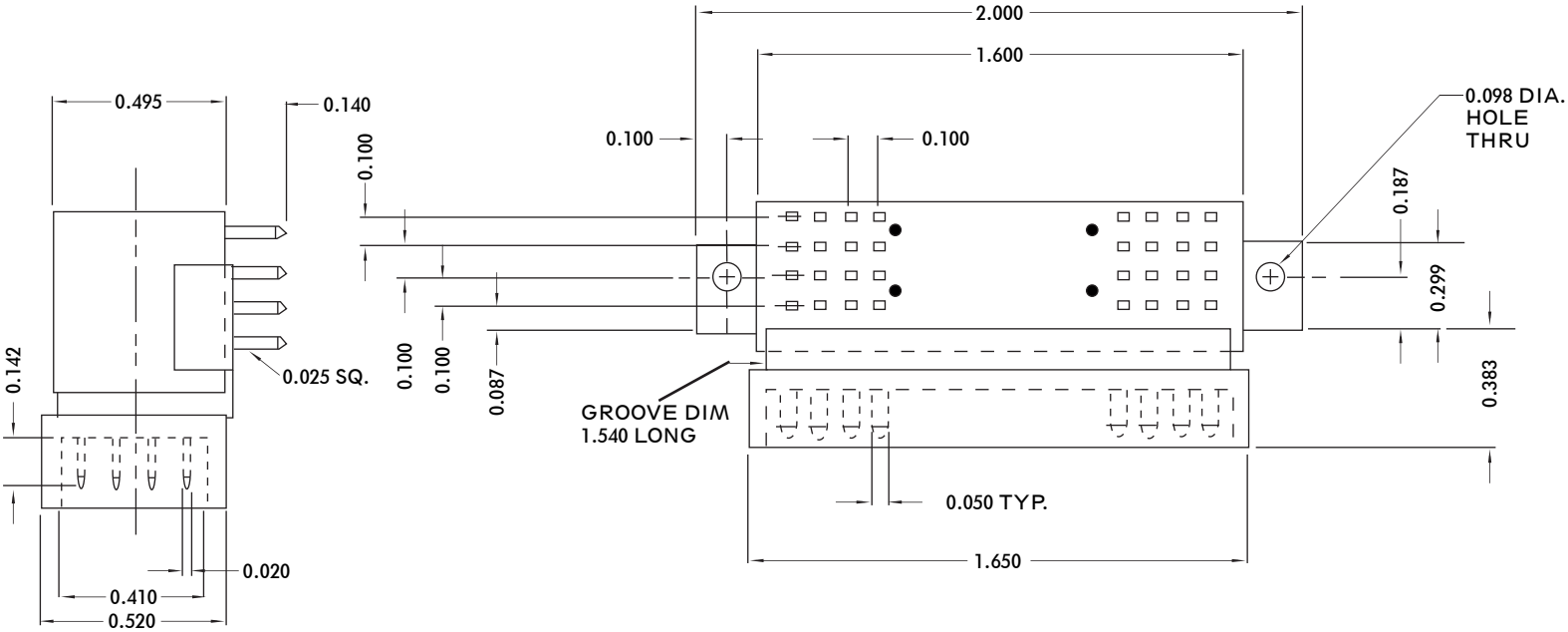

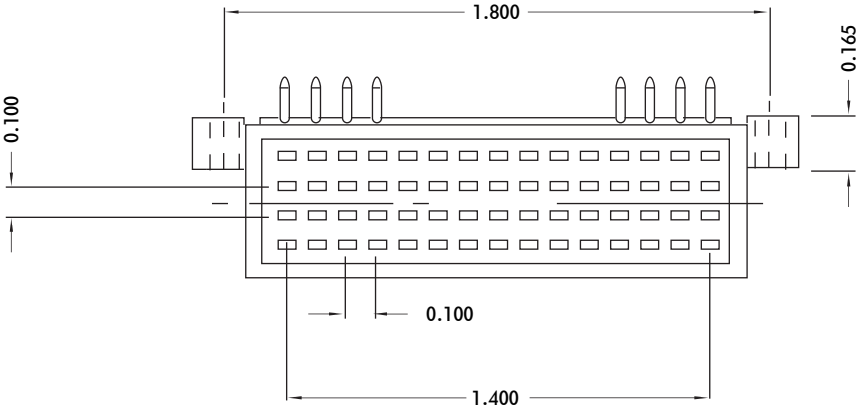

FOR MECHANICAL AND ELECTRICAL SPECIFICATIONS SEE PAGE 70

WFP 120 SERIES

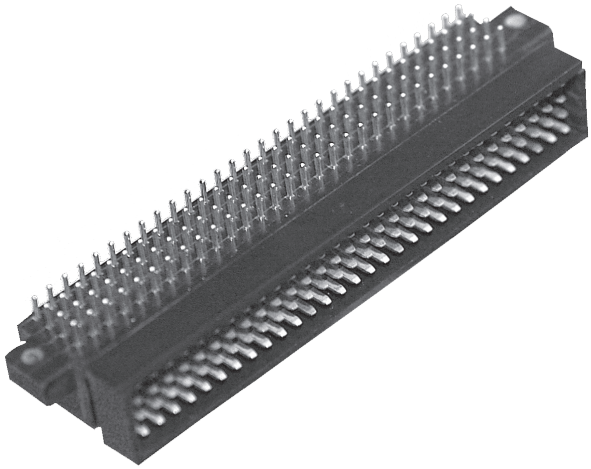

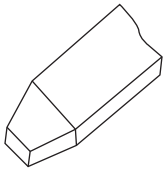

BLADE
CONTACTS

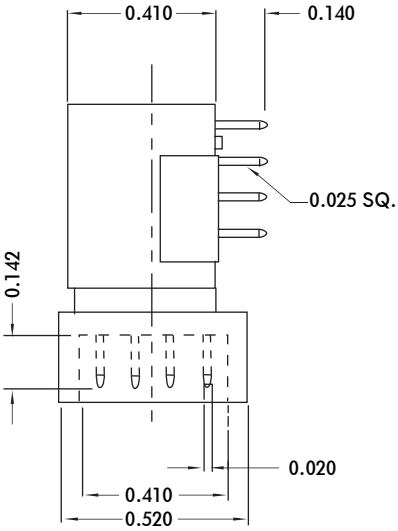

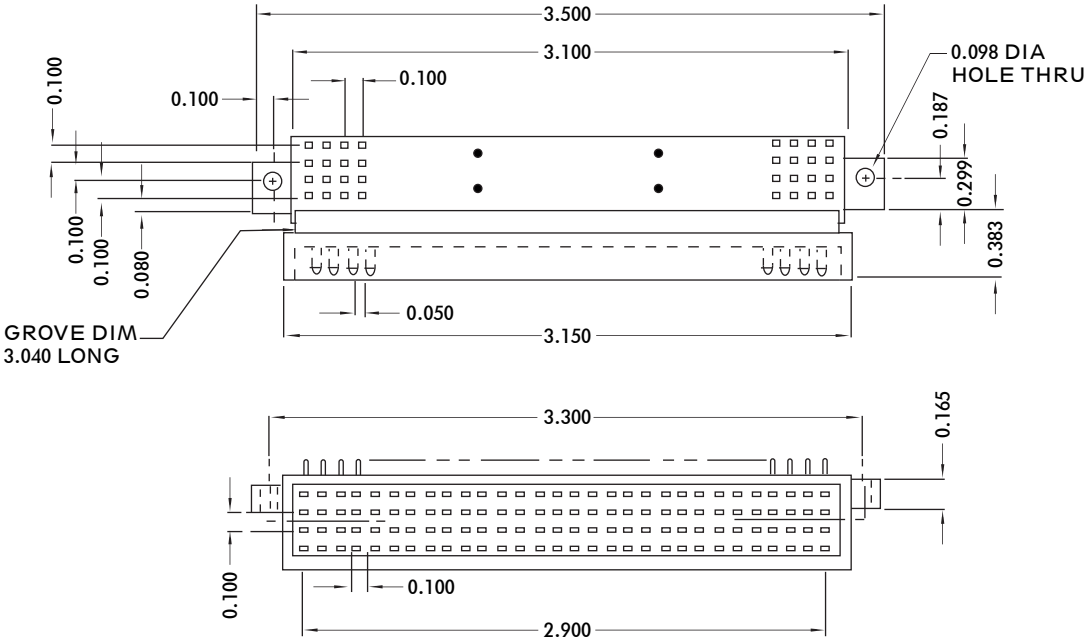

SPECIFICATIONS

Current Rating . . . . . 5 Amperes
Contact to Contact
Sea Level . . . . . .1100 Volts
70,000 Feet. . . . . 375 Volts

CONTACTS:
Contact Material. . . . . Brass per QQ-B-613, 1/2 Hard, Composition 2
Contact Finish. . . . . .Gold Plated per MIL-G-45204, Type II, Class 1
Over Nickel Plate per QQ-N-290, Type VII, Class 1
Contact Tails. . . . . Hot Solder Dipped, 60/40 Tin Lead per QQ-S-571
(OTHER PLATINGS AVAILABLE UPON REQUEST)
Insulation Material. . . . . .Diallyl Phthalate per MIL-M-14, Type SDG-F, Color Black

CONNECTOR MATES TO NAFI STYLE BACKPLANE PER MIL-C-28859 FEATURING CRIMP, REMOVABLE CONTACTS, ASSEMBLY MEETS MIL-C-28754; 30 (-30S-), 50 (-50S-), 80 (-80s-), OR 100 (-100S-) CONTACTS PROVIDED

DIMENSIONS

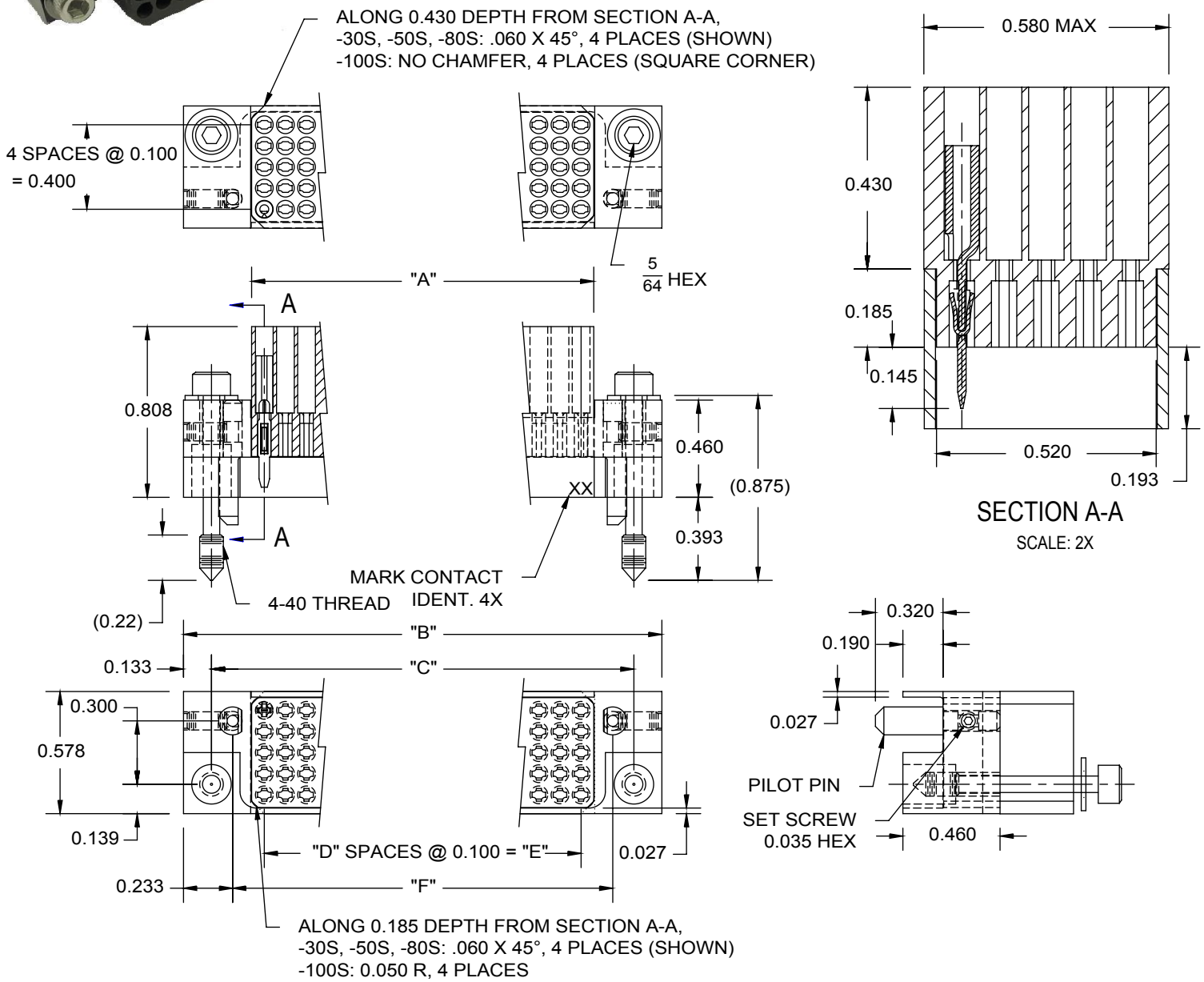

PART NO.	"A"	"B"	"C"	"D"	"E"	"F"
PCPHS-30S-1L2T3	0.620	1.265	1.000	5	0.500	0.800
PCPHS-50S-1L2T3	1.020	1.665	1.400	9	0.900	1.200
PCPHS-80S-1L2T3	1.620	2.265	2.000	15	1.500	1.800
PCPHS-100S-1L2T3	2.020	2.665	2.400	19	1.900	2.200

FOR MECHANICAL AND ELECTRICAL SPECIFICATIONS SEE CATALOG PAGE 72

SPECIFICATIONS

ELECTRICAL

Current Rating.....3.0 Amperes For 20-24 AWG Wire
Dielectric Withstanding Voltage.....
Contact to Contact
Sea Level.....1500 VRMS @ 60 Hz
70,000 Feet.....350 VRMS @ 60 Hz

MECHANICAL

Wiring Terminal Accommodation.....20-24 AWG Wire
Contact Material & Finish.....Per MIL-C-28754/15
Housing Material & Finish.....Aluminum Type 6061 T6511 Per AMS QQ-A-200/8, Anodize Per MIL-A-8625 Type II, Class 2, Color: Black
Mounting Hardware Material & Finish....CRES, Class 304, COND A Per AMS QQ-S-763, Passivated Per AMS2700
Guide/Pilot Pins Material & Finish.....CRES, Class 303, COND A Per ASTM A582, Passivated Per AMS2700
Insulating Material.....Glass Filled Diallyl Phthalate Per MIL-M-14/ASTM D 5948-96, Type GDI-30F, Color: Black
Contact Removal Tool.....Armel Electronics Inc. PN T8050-1

PARALLEL BOARD INTERCONNECTS, SURFACE MOUNT, 2mm CONTACT SPACING

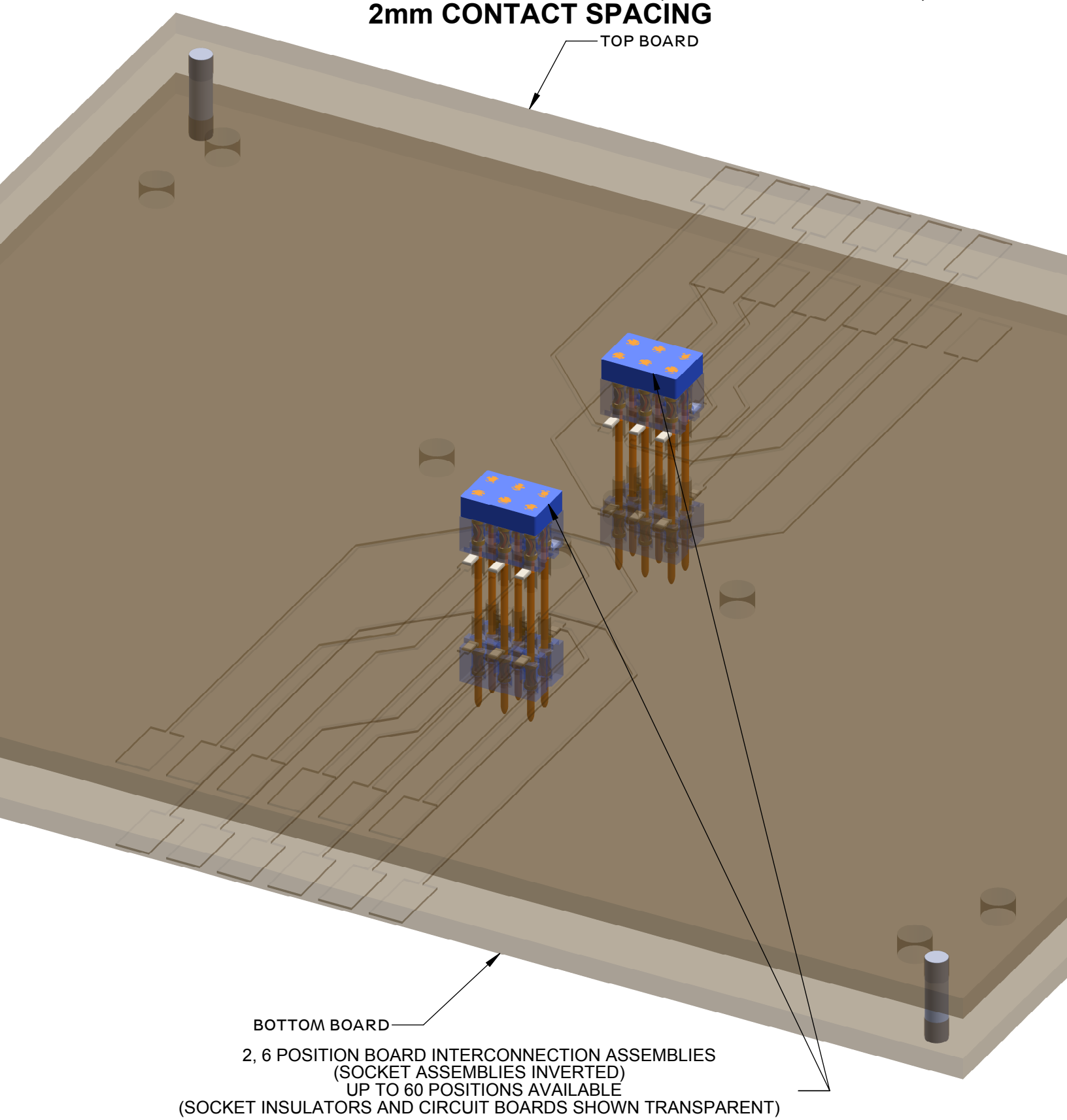

FOR MECHANICAL AND ELECTRICAL SPECIFICATIONS SEE CATALOG PAGES 75 & 77

6 POSITION INTERCONNECTION ASSY (SOCKET INSULATORS SHOWN TRANSPARENT)

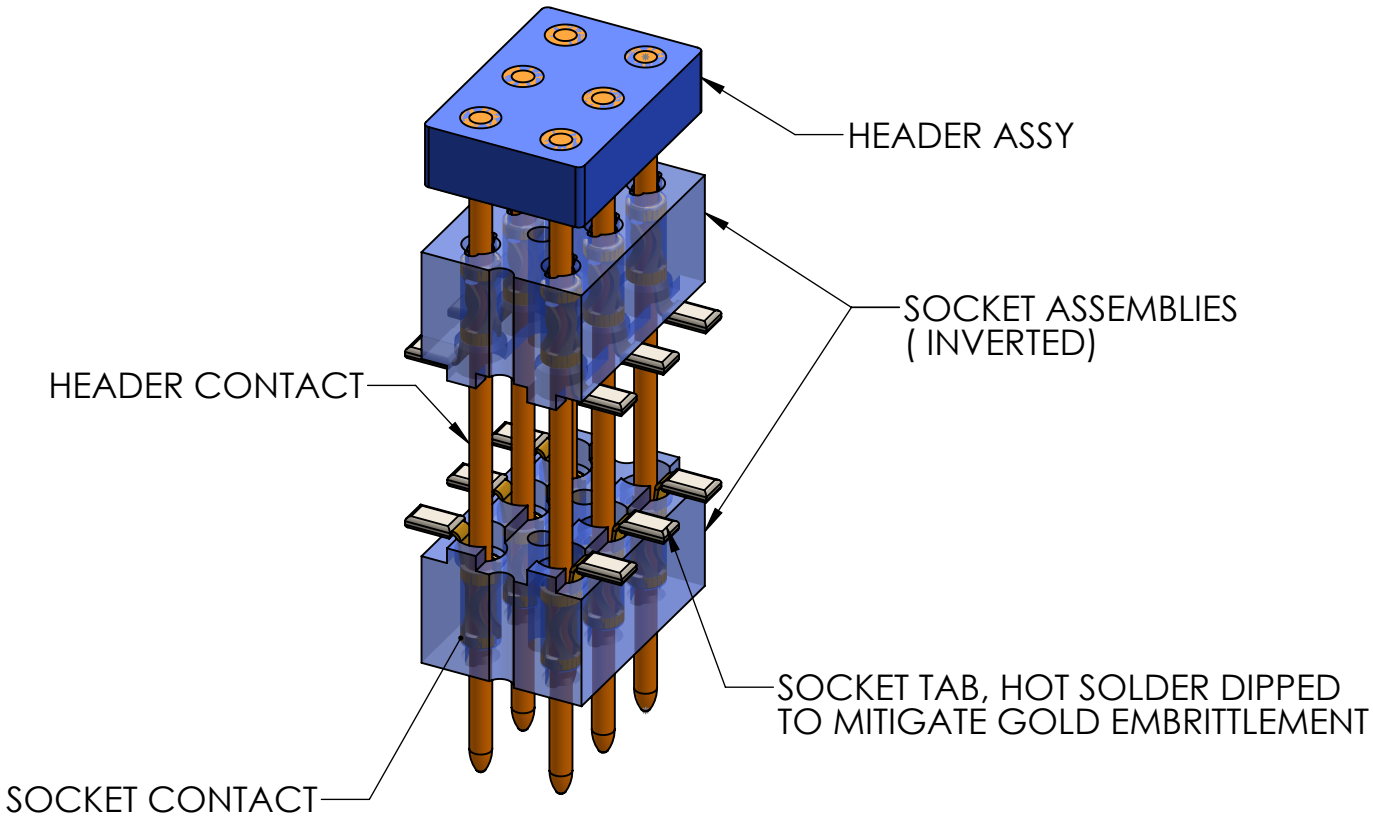

SINGLE SOCKET AND HEADER CONTACT ASSY (HEADER CONTACT SHOWN TRANSPARENT)

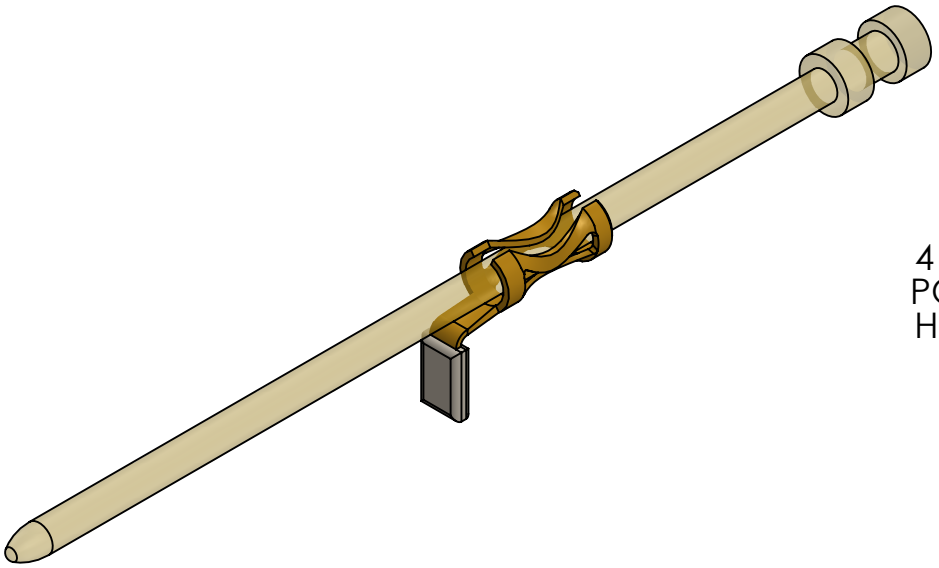

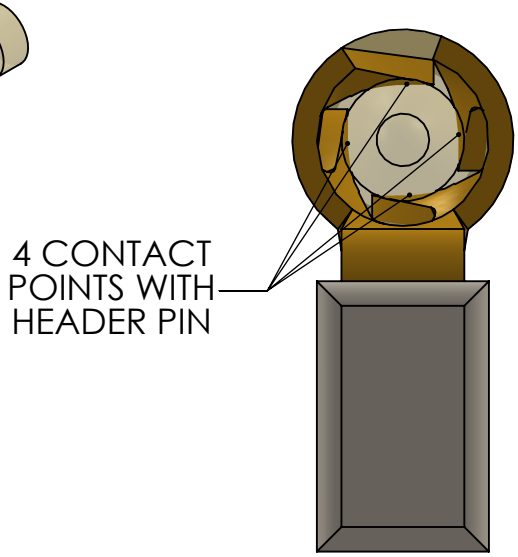

FOR MECHANICAL AND ELECTRICAL SPECIFICATIONS SEE CATALOG PAGES 75 & 77

6 POSITION SOCKET ASSY
(SOCKET INSULATOR SHOWN TRANSPARENT)

ACTUAL SIZE (SCALE 1:1)

SPECIFICATIONS

ELECTRICAL

Current Rating.....2 amperes @ 80°C Ambient
Dielectric Withstanding Voltage.....
Contact to Contact
Sea Level.....1000 VRMS @ 60 Hz

MECHANICAL

Contact Material.....Beryllium Copper, C17200, TD02 PER ASTM B194, after stamping heat treated @ 600°F for max strength
Contact Finish.....(0.000025 In. Min. Thk.) Cobalt Gold Plate, Grade C over (0.000025 In. Min. Thk.) Gold Plate (24 Carat) per MIL-G-45204, Type I, Grade A over (0.0001 In. Min. Thk.) Nickel Plate per QQ-N-290, Type VII, Class 1 (Low Stress Nickel) over (0.0001 In. Min. Thk.) Copper Plate Per MIL-C-14550, Class 4; Hot Solder Dipped (0.002-0.004 In. Thk.) 60/40 Tin/Lead per J-STD-006
Insulation Material.....Short Glass Fiber Filled Diallyl Phthalate per ASTM D5948, Type SDG-F, Color: Blue
Alignment Pin Material.....Nylon 6/6

DIMENSIONS FOR SOCKET ASSEMBLIES FROM 2 TO 60 CONTACTS

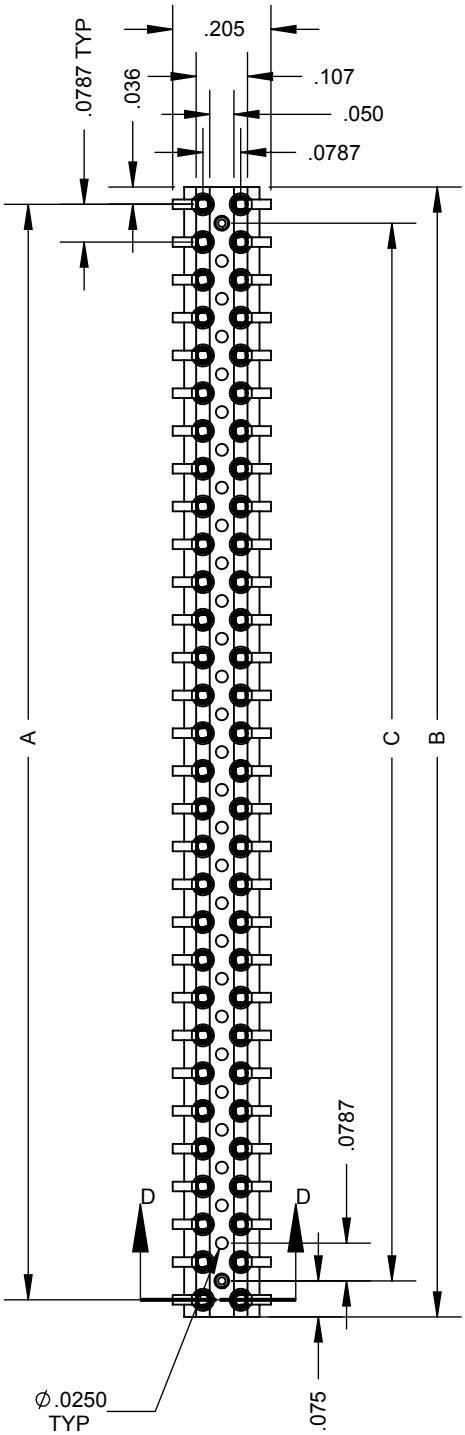

SOCKET ASSEMBLY TABLE					
PART NO	ASSY NO	A±.002	B+0/-.008	C±.002	CONTACTS
M2-60S-02-2L2FT3	3292-0	2.282	2.352	2.204	60
M2-58S-02-2L2FT3	3292-1	2.204	2,274	2.125	58
M2-56S-02-2L2FT3	3292-2	2.125	2.195	2.046	56
M2-54S-02-2L2FT3	3292-3	2.046	2.116	1.968	54
M2-52S-02-2L2FT3	3292-4	1.968	2.038	1.889	52
M2-50S-02-2L2FT3	3292-5	1.889	1.959	1.810	50
M2-48S-02-2L2FT3	3292-6	1.810	1.880	1.731	48
M2-46S-02-2L2FT3	3292-7	1.731	1.801	1.653	46
M2-44S-02-2L2FT3	3292-8	1.653	1.723	1.574	44
M2-42S-02-2L2FT3	3292-9	1.574	1.644	1.495	42
M2-40S-02-2L2FT3	3292-10	1.495	1.565	1.417	40
M2-38S-02-2L2FT3	3292-11	1.417	1.487	1.338	38
M2-36S-02-2L2FT3	3292-12	1.338	1.408	1.259	36
M2-34S-02-2L2FT3	3292-13	1.259	1.329	1.181	34
M2-32S-02-2L2FT3	3292-14	1.181	1.251	1.102	32
M2-30S-02-2L2FT3	3292-15	1.102	1.172	1.023	30
M2-28S-02-2L2FT3	3292-16	1.023	1.093	0.944	28
M2-26S-02-2L2FT3	3292-17	0.944	1.014	0.866	26
M2-24S-02-2L2FT3	3292-18	0.866	0.936	0.787	24
M2-22S-02-2L2FT3	3292-19	0.787	0.857	0.708	22
M2-20S-02-2L2FT3	3292-20	0.708	0.778	0.63	20
M2-18S-02-2L2FT3	3292-21	0.630	0.700	0.551	18
M2-16S-02-2L2FT3	3292-22	0.551	0.621	0.472	16
M2-14S-02-2L2FT3	3292-23	0.472	0.542	0.394	14
M2-12S-02-2L2FT3	3292-24	0.394	0.464	0.315	12
M2-10S-02-2L2FT3	3292-25	0.315	0.385	0.236	10
M2-08S-02-2L2FT3	3292-26	0.236	0.306	0.157	8
M2-06S-02-2L2FT3	3292-27	0.157	0.227	0.079	6
M2-04S-02-2L2FT3	3292-28	0.079	0.149	0.000	4
M2-02S-02-2L2FT3	3292-29	0.000	0.070	0.000	2

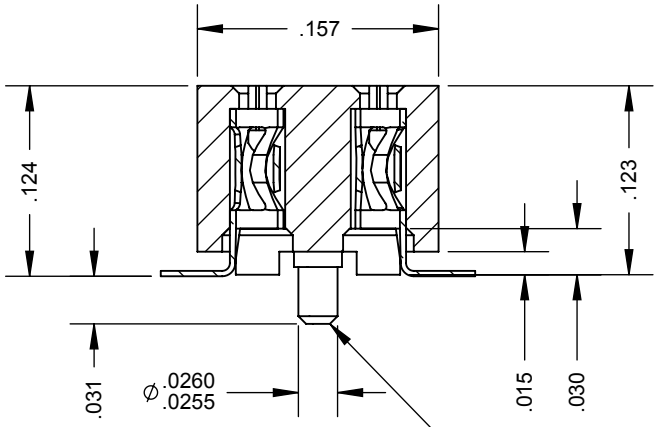

SECTION D-D

FOR CONNECTORS WITH MORE THAN 30 CONTACTS, 2 ALIGNMENT PINS ARE PRESS FIT AT EACH END

SOCKET CONTACTS SHOWN WITHOUT SOLDER DIP

FOR MECHANICAL AND ELECTRICAL SPECIFICATIONS SEE CATALOG PAGES 75 & 77

6 POSITION HEADER ASSY

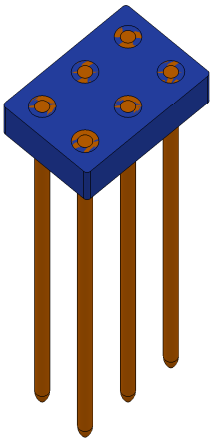

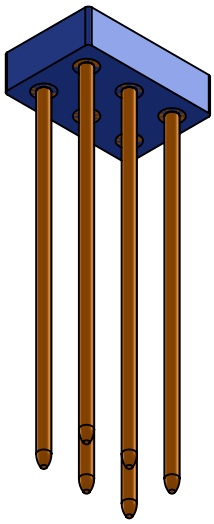

ACTUAL SIZE (SCALE 1:1)

SPECIFICATIONS

ELECTRICAL

Current Rating.....2 amperes @ 80˚C Ambient
Dielectric Withstanding Voltage.....
Contact to Contact
Sea Level.....1000 VRMS @ 60 Hz

MECHANICAL

Contact Material.....Brass Wire Alloy C36000 H02 Temper per ASTM B16.
Contact Finish.....(0.000025 In. Min. Thk.) Cobalt Gold Plate, Grage C over (0.000025 In. Min. Thk.) Gold Plate (24 Carat) per MIL-G-45204, Type I, Grade A over (0.0001 In. Min. Thk.) Nickel Plate per QQ-N-290, Type VII, Class 1 (Low Stress Nickel) over (0.0001 In. Min. Thk.) Copper Plate Per MIL-C-14550, Class 4;
Insulation Material.....Short Glass Fiber Filled Diallyl Phthalate per ASTM D5948, Type SDG-F, Color: Blue

DIMENSIONS FOR HEADER ASSEMBLIES FROM 2 TO 60 CONTACTS

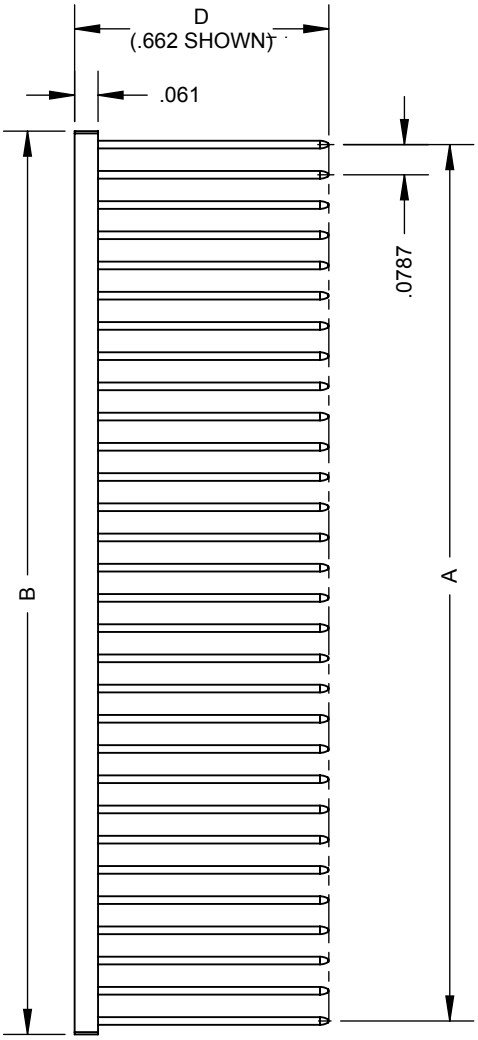

HEADER ASSEMBLY TABLE				
PART NO	DRAWING NO	A±.002	B+0/-.008	CONTACTS
M2-60P-*-02-2L2FT3	9942-*-0	2.282	2.352	60
M2-58P-*-02-2L2FT3	9942-*-1	2.204	2,274	58
M2-56P-*-02-2L2FT3	9942-*-2	2.125	2.195	56
M2-54P-*-02-2L2FT3	9942-*-3	2.046	2.116	54
M2-52P-*-02-2L2FT3	9942-*-4	1.968	2.038	52
M2-50P-*-02-2L2FT3	9942-*-5	1.889	1.959	50
M2-48P-*-02-2L2FT3	9942-*-6	1.810	1.880	48
M2-46P-*-02-2L2FT3	9942-*-7	1.731	1.801	46
M2-44P-*-02-2L2FT3	9942-*-8	1.653	1.723	44
M2-42P-*-02-2L2FT3	9942-*-9	1.574	1.644	42
M2-40P-*-02-2L2FT3	9942-*-10	1.495	1.565	40
M2-38P-*-02-2L2FT3	9942-*-11	1.417	1.487	38
M2-36P-*-02-2L2FT3	9942-*-12	1.338	1.408	36
M2-34P-*-02-2L2FT3	9942-*-13	1.259	1.329	34
M2-32P-*-02-2L2FT3	9942-*-14	1.181	1.251	32
M2-30P-*-02-2L2FT3	9942-*-15	1.102	1.172	30
M2-28P-*-02-2L2FT3	9942-*-16	1.023	1.093	28
M2-26P-*-02-2L2FT3	9942-*-17	0.944	1.014	26
M2-24P-*-02-2L2FT3	9942-*-18	0.866	0.936	24
M2-22P-*-02-2L2FT3	9942-*-19	0.787	0.857	22
M2-20P-*-02-2L2FT3	9942-*-20	0.708	0.778	20
M2-18P-*-02-2L2FT3	9942-*-21	0.630	0.700	18
M2-16P-*-02-2L2FT3	9942-*-22	0.551	0.621	16
M2-14P-*-02-2L2FT3	9942-*-23	0.472	0.542	14
M2-12P-*-02-2L2FT3	9942-*-24	0.394	0.464	12
M2-10P-*-02-2L2FT3	9942-*-25	0.315	0.385	10
M2-08P-*-02-2L2FT3	9942-*-26	0.236	0.306	8
M2-06P-*-02-2L2FT3	9942-*-27	0.157	0.227	6
M2-04P-*-02-2L2FT3	9942-*-28	0.079	0.149	4
M2-02P-*-02-2L2FT3	9942-*-29	0.000	0.070	2

*	D ± .005
1	.662
2	.837
3	.600
4	.750

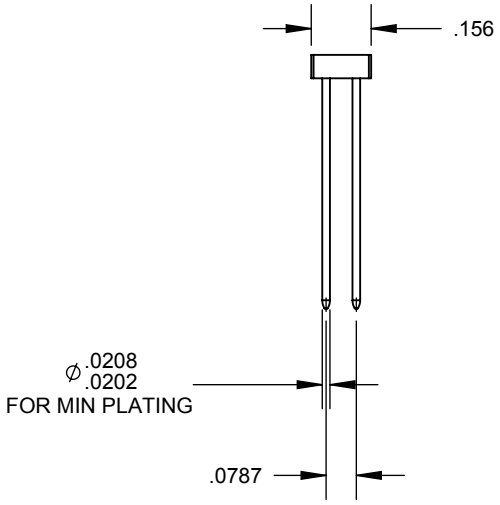

FOR MECHANICAL AND ELECTRICAL SPECIFICATIONS SEE CATALOG PAGES 75 & 77

GENERAL SPECIFICATIONS

PART NUMBER

DEP23K-3 J F V2

- V2 — SUFFIX 4 CONTACT PLATING
- F — SUFFIX 3 SUPPLEMENTARY CONTACT TERMINAL FINISH
- J — SUFFIX 2 INSULATION MATERIAL
- 3 — CONTACT TERMINATION
- K — SUFFIX 1 CONTACT STYLE
- 23 — NUMBER OF CONTACTS
- DEP — SERIES

SUFFIX 1

S	Socket Contacts, Open Entry
K	Socket Contacts, Closed Entry
M&P	Pin Contacts

SUFFIX 2

J	Diallyl Phthalate, Glass-Fiber Filled per MIL-M-14, Type GDI-30F
L	Diallyl Phthalate, Glass-Fiber Filled per MIL-M-14, Type SDG-F
L2	Diallyl Phthalate, Glass-Fiber Filled per MIL-M-14, Type SDG-F Color Black
H	Diallyl Phthalate, Orlon Filled per MIL-M-14, Type SDI-5

SUFFIX 3

None	No Supplementary Contact Terminal Finish
F	Solder (60-40) with Water Soluble Rosin Flux (Solder cup prefilled) (Right Angle, Straight Pin, Eyelet and Turret - Dip Soldered)

SUFFIX 4

V2	Gold Plate (0.00005) per MIL-G-45204, Type II, Class I over Copper Strike
T3	Gold Plate (0.00005) per MIL-G-45204, Type II, Class I over Nickel Plate (0.0001) per QQ-N-290, Type VII, Class I (low stress nickel) over Copper Plate per MIL-C-14550, Class 4.
T6	Gold Plate (0.00005) per MIL-G-45204, Type II, Class I, Grade C over Gold Plate per MIL-G-45204, Type I, Class 00, Grade A over Nickel Plate per QQ-N-290, 30-50 microinches (low stress nickel) over Copper Plate per MIL-C-14550, Class 4.
T7	Gold Plate (0.00005) per MIL-G-45204, Type II, Class 1, Grade B over Gold Plate (0.00005) per MIL-G-45204, Type I, Class 1, Grade A, over 50-100 microinches (Low Stress Nickel) per QQ-N-290, Type VII, Class 1, Grade G over Copper Plate per MIL-C-14550, Class 4. (OTHER PLATINGS AVAILABLE UPON REQUEST)

GENERAL

1	Meet or exceed applicable requirements of MIL-C-55302
2	Adheres to Grid System
3	Adaptable for Automation
4	May be Dip Soldered to the board
5	Either or both male or female may be card mounted
6	Available for straight or right angle mounting
7	May be used with single or double sided boards
8	Adaptable for use with boards of various thickness
9	Closely controlled board tolerances not required
10	Reduces possibility of moisture contamination
11	Eliminates wear or abrasion to board contact fingers
12	Both Pin and Socket Contacts are precision machined
13	Socket Contacts free floating, Pin Contacts molded in place
14	Secured to board by Stud or Rivet
15	Polarized by Guide Pins, and Contact arrangement
16	Additional Polarization or keying accomplishing by omission of contacts, by Guide Pins, and Contact arrangement
17	Closed-entry contacts meet probe damage test of MIL-C-5015
18	Contacts Gold Plated for low contact resistance

MATERIAL and FINISH SPECIFICATIONS

Stainless Steel	QQ-S-763/766 Type 303 (non-magnetic)
Cold Roll Steel	QQ-S-640, Composition CR
Brass	QQ-B-626
Phosphor Bronze	QQ-B-750
Beryllium Copper	QQ-C-533
Aluminum	QQ-A-365
Cadmium Plate	QQ-P-416, Type II, Class 2
Nickel Plate	QQ-N-290, Type VII, Class 2
Passivate	QQ-P-35 / AMS 2700
Hot Tin Dip	Centriuged & Reflowed, Solder Per QQ-S-571 SN60. Flux per MIL-F-14256, Type R or RMA.

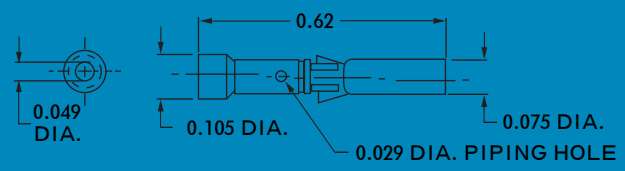

Closed Entry Contact
No. 1007010-1

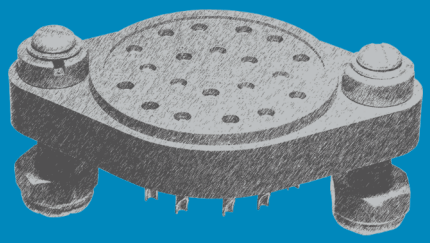

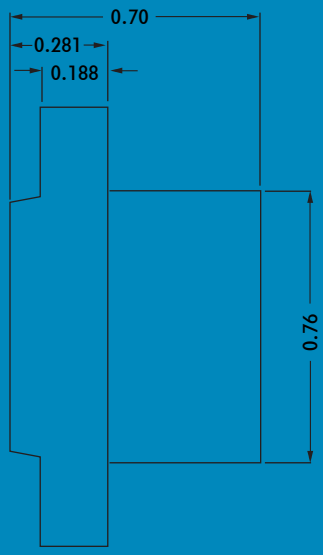

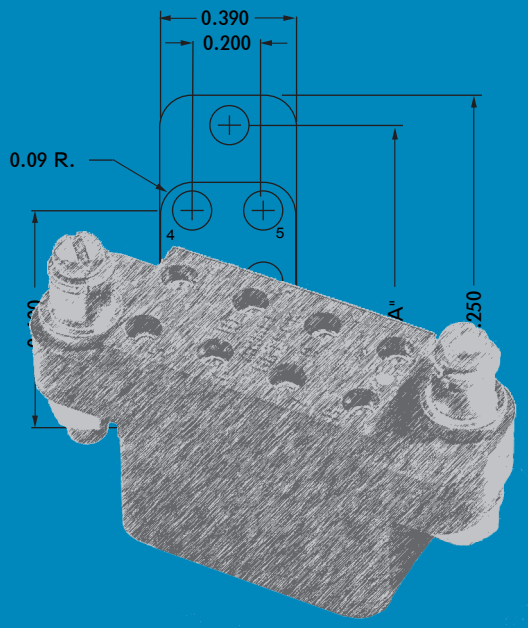

relay sockets

ARMEL®

RELAY SOCKET INDEX

ARMEL RELAY SOCKETS are designed to attain high reliability as a primary objective based on the parameters delineated in the MIL-S-12883 Specification. This design objective is accomplished and maintained by the stringent quality control procedures maintained by Armel Electronics, Inc.

When mated with relays produced by some of the leading relay manufacturers, these sockets attain a confidence level consistent with the most exacting specifications and systems requirements.

These sockets are available with a choice of thermo-setting insulations in which free-floating, precision-maintained contacts are securely contained. Variations in contact materials and platings, in addition to the mounting hardware materials and finishes, are available for special applications.

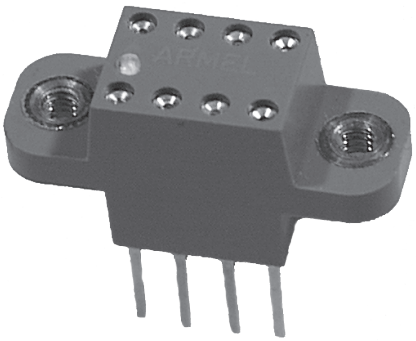

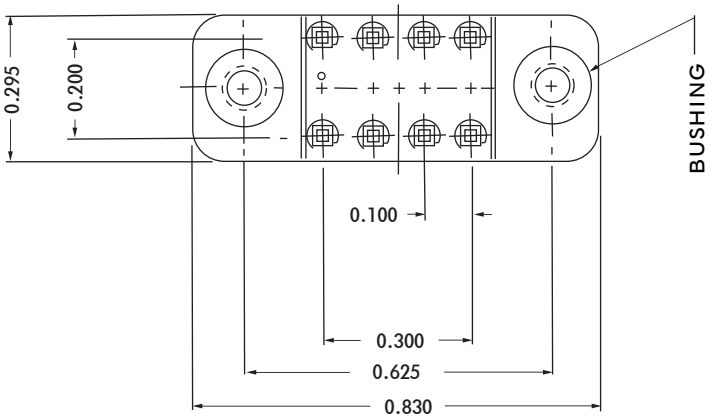

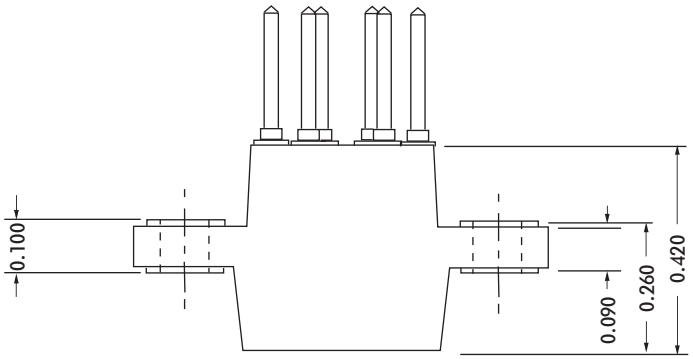

CONTACT DATA		CHASSIS MOUNTING DATA		
		X-DIMENSION	CLEARANCE HOLE FOR NO.2 SCREW	NO.2 -56 THREAD
OPEN ENTRY	SOLDER CUP (3/16)			
	EYELET (1/4)			
	STRAIGHT (3/16)			
CLOSED ENTRY	WIRE WRAP (0.025 SQ., X)	.24	HAN-13KLT3	HAN-518KLT3
	EYELET (1/4)			
	STRAIGHT (1/8)			

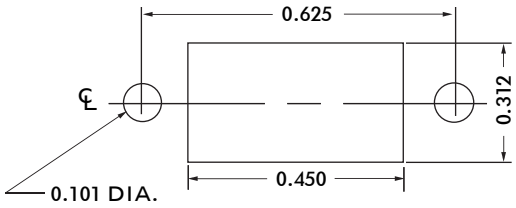

RECOMMENDED CHASSIS CUT-OUT

ELECTRICAL

Contact Rating . . . . . 3 Amperes
Withstanding Voltage:
- Contact to Contact Sea Level. . . . 1000 VRMS Minimum
- Contact to Ground Sea Level. . . . 1800 VRMS Minimum
- Contact to Contact 70,000 Ft. . . . . 300 VRMS Minimum
- Contact to Ground 70,000 Ft. . . . . 450 VRMS Minimum

MECHANICAL

Creepage Between Contacts . . . . . 0.02 Minimum
Air Space Between Contacts . . . . . 0.02 Minimum
Contacts to Accept 0.020 ± 0.001 DIA. Pins

Contacts:
- Heat Treated Beryllium Copper
- Gold Plated over Copper or Nickel Plate

Mounting Hardware:
- Threaded or Clearance Hole Mounting Bushings

Insulation Material:
- Choice of "MIL Approved" Thermosetting Insulations (See Page 45)

Temperature Ratings: -65°C to +125°C
Weight of Socket with Mountings: 0.10 oz.

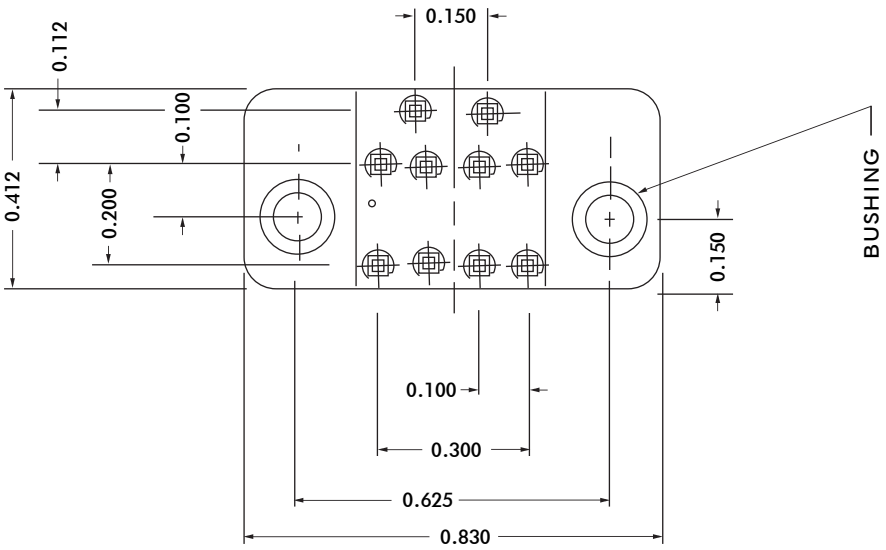

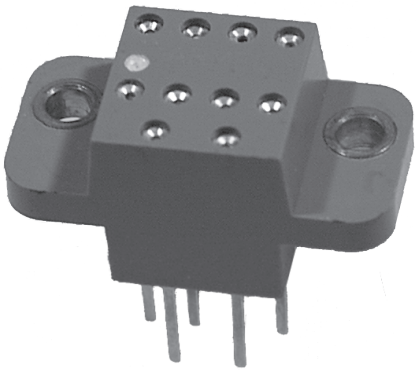

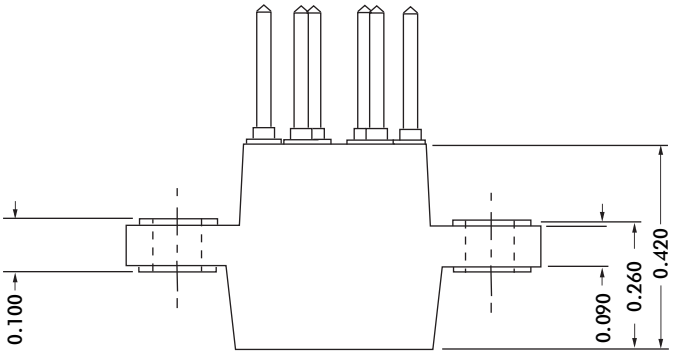

CONTACT DATA		CHASSIS MOUNTING DATA		
		X-DIMENSION	CLEARANCE HOLE FOR NO.2 SCREW	NO.2 -56 THREAD
OPEN ENTRY	SOLDER CUP (3/16)			
	EYELET (1/4)			
	STRAIGHT (3/16)			
CLOSED ENTRY	WIRE WRAP (0.025 SQ., X)	.24	HAND-13KLT3	HAND-518KLT3
	EYELET (1/4)			
	STRAIGHT (1/8)			

ELECTRICAL

Contact Rating . . . . . 3 Amperes
Withstanding Voltage:
- Contact to Contact Sea Level. . . 1000 VRMS Minimum
- Contact to Ground Sea Level. . . 1800 VRMS Minimum
- Contact to Contact 70,000 Ft. . . 300 VRMS Minimum
- Contact to Ground 70,000 Ft. . . 450 VRMS Minimum

MECHANICAL

Creepage Between Contacts . . . . . .0.02 Minimum
Air Space Between Contacts . . . . . .0.02 Minimum
Contacts to Accept 0.020 ± 0.001 DIA. Pins

Contacts:
- Heat Treated Beryllium Copper
- Gold Plated over Copper or Nickel Plate

Mounting Hardware:
- Threaded or Clearance Hole Mounting Bushings

Insulation Material:
- Choice of "MIL Approved" Thermosetting Insulations (See Page 45)

Temperature Ratings: -65°C to +125°C
Weight of Socket with Mountings: 0.15 oz.

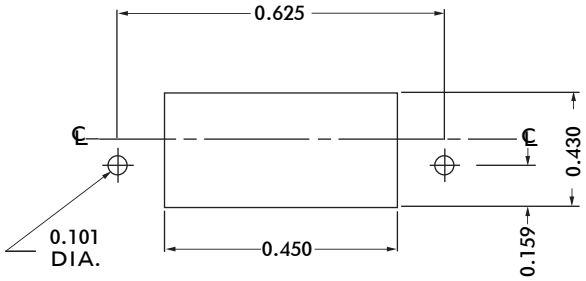

RECOMMENDED CHASSIS CUT-OUT

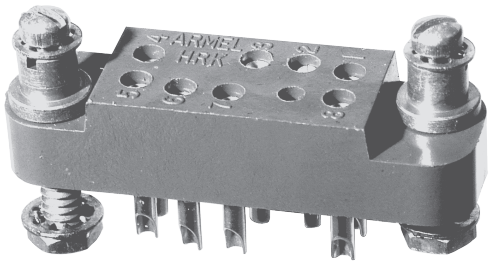

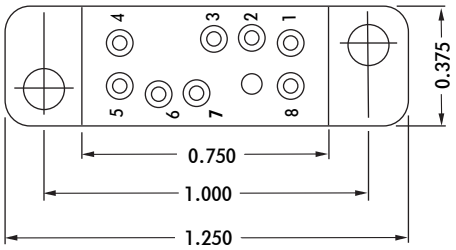

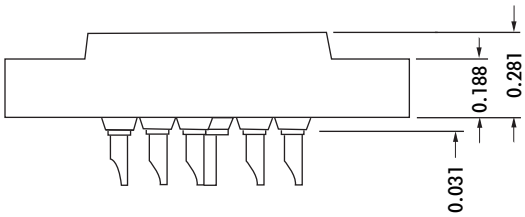

CONTACT DATA		CHASSIS MOUNTING DATA				
		CHASSIS THICKNESS	X-DIMENSION	BELOW CHASSIS (X)	BELOW CHASSIS (X)	ABOVE CHASSIS (0.23)
OPEN ENTRY	SOLDER CUP (3/16)	1/16	.17	HRK - 1		HRK - 2
		3/32	.14		HRK - 31	HRK - 32
		1/8	.12		HRK - 41	HRK - 42
	EYELET (1/4)	1/16	.17	HRK - 5		HRK - 6
		3/32	.14		HRK - 35	HRK - 36
		1/8	.12		HRK - 45	HRK - 46
	STRAIGHT (3/16)	1/16				HRK - 4
		3/32				HRK - 34
		1/8				
CLOSED ENTRY	SOLDER CUP (3/16)	1/16	.17	HRK - 1K		HRK - 2K
		3/32	.14		HRK - 31K	HRK - 32K
		1/8	.12		HRK - 41K	HRK - 42K
	EYELET (1/4)	1/16	.17	HRK - 5K		HRK - 6K
		3/32	.14		HRK - 35K	HRK - 36K
		1/8	.12		HRK - 45K	HRK - 46K
	STRAIGHT (1/8)	1/16				HRK - 4K
		3/32				
		1/8				

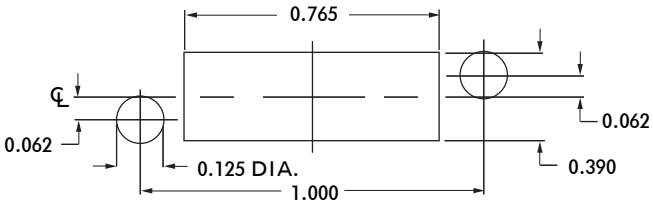

RECOMMENDED CHASSIS CUT-OUT

ELECTRICAL:

Wire Size:

Solder Cup Type . . . . . .One #20 AWG
Eyelet Type . . . . . .Two #20 AWG or Three #22 AWG

Current Rating . . . . . 3 Amperes

Withstanding Voltage:

Contact to Contact Sea Level . . . . . 1000 VRMS Minimum
Contact to Ground Sea Level . . . . . .1800 VRMS Minimum
Contact to Contact 70,000 Ft. . . . . .300 VRMS Minimum
Contact to Ground 70,000 Ft. . . . . .450 VRMS Minimum

MECHANICAL:

Creepage Between Contacts . . . . . .0.09 Minimum
Air Space Between Contacts . . . . . .0.03 Minimum
Contacts to Accept 0.030 ± 0.001 DIA. Pins

Contacts:

Spring Temper Grade "A" Phosphor Bronze, or
Heat Treated Beryllium Copper
Gold Plated over Copper or Nickel Plate

Mounting Hardware:

Special Studs, Screws, Lockwashers, and Nuts

Insulation Material:

Choice of **MIL Approved** Thermosetting Insulations (See Page 45)

Temperature Ratings: -65°C to +125°C
Weight of Socket with Mountings: 0.23 oz.

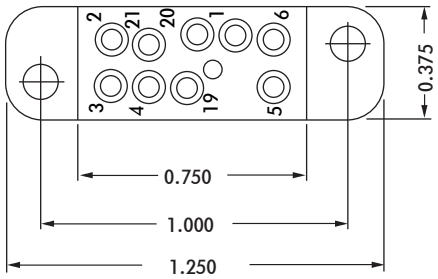

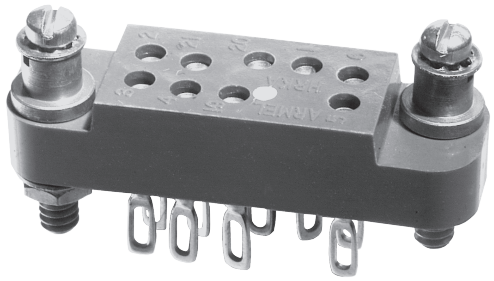

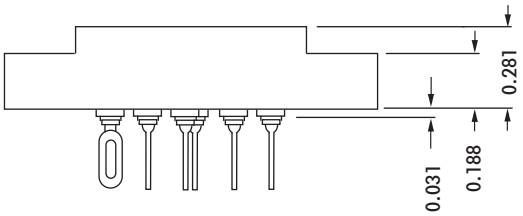

CONTACT DATA	CHASSIS MOUNTING DATA				
	CHASSIS THICKNESS	X-DIMENSION	BELOW CHASSIS	BELOW CHASSIS	ABOVE CHASSIS
SOLDER CUP	1/16	.17	HRKA - 1		HRKA - 2
	3/32	.14		HRKA - 31	HRKA - 32
	1/8	.12		HRKA - 41	HRKA - 42
EYELET	1/16	.17	HRKA - 5		HRKA - 6
	3/32	.14		HRKA - 35	HRKA - 36
	1/8	.12		HRKA - 45	HRKA - 46
STRAIGHT	1/16				HRKA - 4
	3/32				
	1/8				

ELECTRICAL

Wire Size:

Solder Cup Type. . . . . .One #20 AWG

Eyelet Type. . . . . .Two #20 AWG or Three #22 AWG

Current Rating. . . . . 3 Amperes

Withstanding Voltage:

Contact to Contact Sea Level . . . . . 1000 VRMS Minimum

Contact to Ground Sea Level . . . . . .1800 VRMS Minimum

Contact to Contact 70,000 Ft. . . . . .300 VRMS Minimum

Contact to Ground 70,000 Ft. . . . . .450 VRMS Minimum

MECHANICAL

Creepage Between Contacts. . . . . 0.09 Minimum

Air Space Between Contacts. . . . . 0.03 Minimum

Contacts to Accept 0.030 ± 0.001 DIA. Pins

Contacts:

Spring Temper Grade "A" Phosphor Bronze, or
Heat Treated Beryllium Copper
Gold Plated over Copper or Nickel Plate

Mounting Hardware:

Special Studs, Screws, Lockwashers, and Nuts

Insulation Material:

Choice of **MIL Approved** Thermosetting Insulations (See Page 45)

Temperature Ratings: -65°C to +125°C

Weight of Socket with Mountings: 0.24 oz.

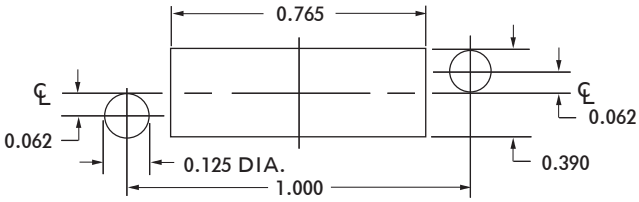

RECOMMENDED CHASSIS CUT-OUT

HRKB SERIES

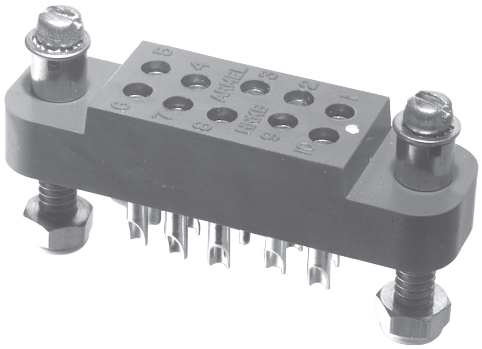

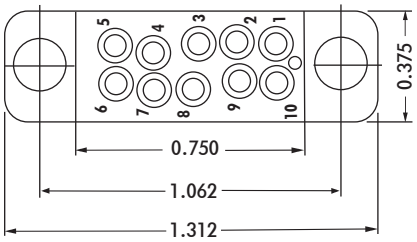

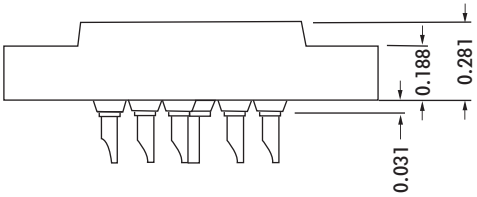

CONTACT DATA		CHASSIS MOUNTING DATA				
		CHASSIS THICKNESS	X-DIMENSION	BELOW CHASSIS (X)	BELOW CHASSIS (X)	ABOVE CHASSIS (0.23)
OPEN ENTRY	SOLDER CUP (3/16)	1/16	.17	HRKB - 1		HRKB - 2
		3/32	.14		HRKB - 31	HRKB - 32
		1/8	.12		HRKB - 41	HRKB - 42
	EYELET (1/4)	1/16	.17	HRKB - 5		HRKB - 6
		3/32	.14		HRKB - 35	HRKB - 36
		1/8	.12		HRKB - 45	HRKB - 46
	STRAIGHT (3/16)	1/16				HRKB - 4
		3/32				
		1/8				
CLOSED ENTRY	SOLDER CUP (7/32)	1/16	.17	HRKB - 1K		HRKB - 2K
		3/32	.14		HRKB - 31K	HRKB - 32K
		1/8	.12		HRKB - 41K	HRKB - 42K
	EYELET (1/4)	1/16	.17	HRKB - 5K		HRKB - 6K
		3/32	.14		HRKB - 35K	HRKB - 36K
		1/8	.12		HRKB - 45K	HRKB - 46K
	STRAIGHT (1/8)	1/16				HRKB - 4K
		3/32				
		1/8				

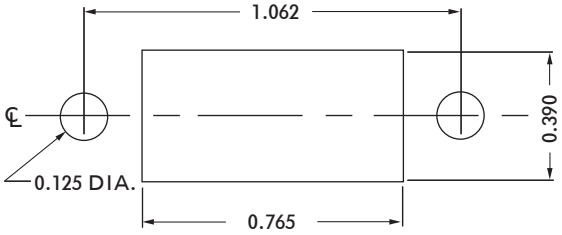

RECOMMENDED CHASSIS CUT-OUT

ELECTRICAL

Wire Size:

Solder Cup Type. . . . . .One #20 AWG

Eyelet Type. . . . . .Two #20 AWG or Three #22 AWG

Current Rating. . . . . .3 Amperes

Withstanding Voltage:

Contact to Contact Sea Level. . . . . 1000 VRMS Minimum

Contact to Ground Sea Level. . . . . 2250 VRMS Minimum

Contact to Contact 70,000 Ft.. . . . . 300 VRMS Minimum

Contact to Ground 70,000 Ft.. . . . . 500 VRMS Minimum

MECHANICAL

Creepage Between Contacts. . . . . 0.09 Minimum

Air Space Between Contacts. . . . . 0.03 Minimum

Contacts to Accept 0.030 ± 0.001 DIA. Pins

Contacts:

Spring Temper Grade “A” Phosphor Bronze or Heat Treated Beryllium Copper

Gold Plated over Copper or Nickel Plate

Mounting Hardware:

Special Studs, Screws, Lockwashers, and Nuts

Insulation Material:

Choice of **MIL Approved** Thermosetting Insulations (See Page 45)

Temperature Ratings: -65°C to +125°C

Weight of Socket with Mountings: 0.26 oz.

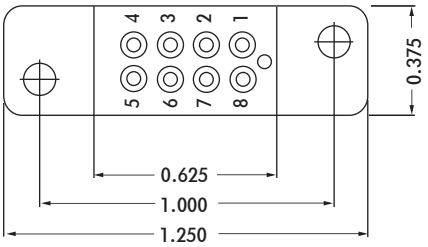

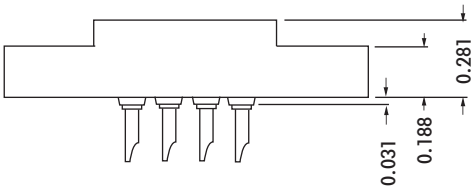

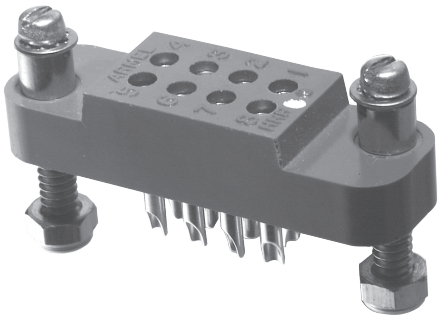

CONTACT DATA	CHASSIS MOUNTING DATA				
	CHASSIS THICKNESS	X-DIMENSION	X — BELOW CHASSIS	X — BELOW CHASSIS	0.23 — ABOVE CHASSIS
SOLDER CUP (3/16)	1/16	.17	HRR - 1		HRR - 2
	3/32	.14		HRR - 31	HRR - 32
	1/8	.12		HRR - 41	HRR - 42
EYELET (1/4)	1/16	.17	HRR- 5		HRR - 6
	3/32	.14		HRR - 35	HRR - 36
	1/8	.12		HRR - 45	HRR - 46
STRAIGHT (1/8)	1/16				HRR - 4
	3/32				
	1/8				

ELECTRICAL

Wire Size:

Solder Cup Type. . . . . .One #20 AWG
Eyelet Type. . . . . .Two #20 AWG or
Three #22 AWG

Current Rating. . . . . .3 Amperes

Withstanding Voltage:

Contact to Contact Sea Level. . .1000 VRMS Minimum
Contact to Ground Sea Level. . . 3300 VRMS Minimum
Contact to Contact 70,000 Ft.. . . .300 VRMS Minimum
Contact to Ground 70,000 Ft.. . . . 675 VRMS Minimum

MECHANICAL

Creepage Between Contacts. . . . . 0.09 Minimum
Air Space Between Contacts. . . . . 0.03 Minimum
Contacts to Accept 0.020 ± 0.001 DIA. Pins

Contacts:

Spring Temper Grade "A" Phosphor Bronze, or
Heat Treated Beryllium Copper
Gold Plated over Copper or Nickel Plate

Mounting Hardware:

Special Studs, Screws, Lockwashers, and Nuts

Insulation Material:

Choice of **MIL Approved** Thermosetting
Insulations (See Page 45)

Temperature Ratings: -65ºC to +125ºC
Weight of Socket with Mountings: 0.23 oz.

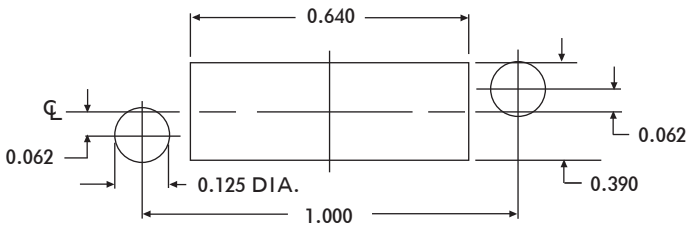

RECOMMENDED CHASSIS CUT-OUT

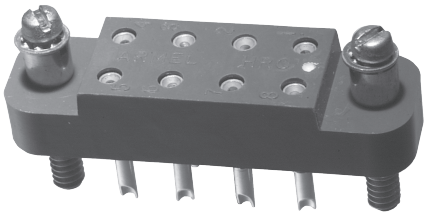

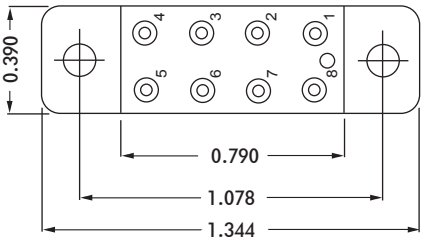

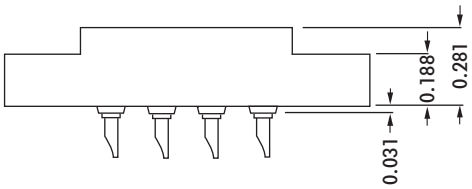

CONTACT DATA		CHASSIS MOUNTING DATA				
		CHASSIS THICKNESS	X-DIMENSION	BELOW CHASSIS	BELOW CHASSIS	ABOVE CHASSIS
OPEN ENTRY	SOLDER CUP (3/16)	1/16	.17	HRC - 1		HRC - 2
		3/32	.14		HRC - 31	HRC - 32
		1/8	.12		HRC - 41	HRC - 42
	EYELET (1/4)	1/16	.17	HRC - 5		HRC - 6
		3/32	.14		HRC - 35	HRC - 36
		1/8	.12		HRC - 45	HRC - 46
	STRAIGHT (3/16)	1/16				HRC - 4
		3/32				HRC - 34
		1/8				
	0.025 SQ. WIRE WRAP (0.68)	1/16	.17	HRC - 9		HRC - 13
		3/32				
		1/8				
	0.045 SQ. WIRE WRAP (0.79)	1/16	.17	HRC - 513		
		3/32				
		1/8				HRC - 18
CLOSED ENTRY	SOLDER CUP (7/32)	1/16	.17	HRC - 1K		HRC - 2K
		3/32	.14		HRC - 31K	HRC - 32K
		1/8	.12		HRC - 41K	HRC - 42K
	EYELET (1/4)	1/16	.17	HRC - 5K		HRC - 6K
		3/32	.14		HRC - 35K	HRC - 36K
		1/8	.12		HRC - 45K	HRC - 46K
	STRAIGHT (1/8)	1/16				HRC - 4K
		3/32				
		1/8				
	0.045 SQ. WIRE WRAP (5/8)	1/16	.17	HRC - 818K		HRC - 18K

ELECTRICAL

Wire Size:
- Solder Cup Type. . . . . One #20 AWG
- Eyelet Type . . . . . .Two #20 AWG or Three #22 AWG

Current Rating . . . . . 3 Amperes

Withstanding Voltage:
- Contact to Contact Sea Level. . . . . 2700 VRMS Minimum
- Contact to Ground Sea Level. . . . . 2250 VRMS Minimum
- Contact to Contact 70,000 Ft.. . . . . 560 VRMS Minimum
- Contact to Ground 70,000 Ft.. . . . . 500 VRMS Minimum

MECHANICAL

Creepage Between Contacts. . . . . 0.17 Minimum

Air Space Between Contacts. . . . . 0.11 Minimum

Contacts to Accept 0.030 ± 0.001 DIA. Pins

Contacts:
- Spring Temper Grade “A” Phosphor Bronze, or
- Heat Treated Beryllium Copper
- Gold Plated over Copper or Nickel Plate

Mounting Hardware:
- Special Studs, Screws, Lockwashers, and Nuts

Insulation Material:
- Choice of **MIL Approved** Thermosetting Insulations (See Page 45)

Temperature Ratings: -65°C to +125°C

Weight of Socket with Mountings: 0.23 oz.

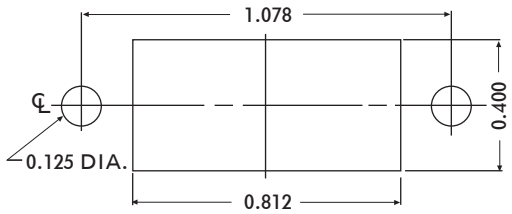

RECOMMENDED CHASSIS CUT-OUT

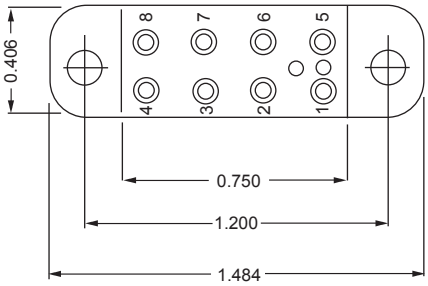

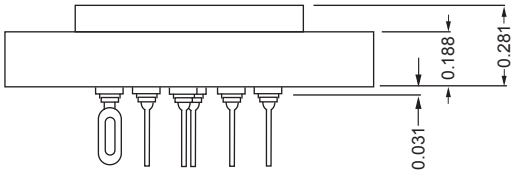

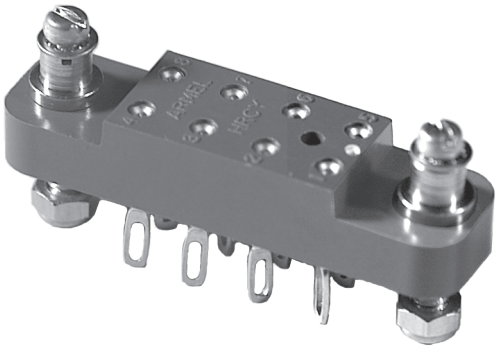

CONTACT DATA		CHASSIS MOUNTING DATA				
		CHASSIS THICKNESS	X-DIMENSION	X — BELOW CHASSIS	X — BELOW CHASSIS	0.23 — ABOVE CHASSIS
OPEN ENTRY	SOLDER CUP (3/16)	1/16	.17	HRCY - 1		HRCY - 2
		3/32	.14		HRCY - 31	HRCY - 32
		1/8	.12		HRCY - 41	HRCY - 42
	EYELET (1/4)	1/16	.17	HRCY - 5		HRCY - 6
		3/32	.14		HRCY - 35	HRCY - 36
		1/8	.12		HRCY - 45	HRCY - 46
	STRAIGHT (3/16)	1/16				HRCY - 4
		3/32				
		1/8				
CLOSED ENTRY	SOLDER CUP (7/32)	1/16	.17	HRCY - 1K		HRCY - 2K
		3/32	.14		HRCY - 31K	HRCY - 32K
		1/8	.12		HRCY - 41K	HRCY - 42K
	EYELET (1/4)	1/16	.17	HRCY - 5K		HRCY - 6K
		3/32	.14		HRCY - 35K	HRCY - 36K
		1/8	.12		HRCY - 45K	HRCY - 46K
	STRAIGHT (1/8)	1/16				HRCY - 4K
		3/32				
		1/8				

ELECTRICAL

Wire Size:

Solder Cup Type. . . . . .One #20 AWG

Eyelet Type. . . . . .Two #20 AWG or Three #22 AWG

Current Rating. . . . . .3 Amperes

Withstanding Voltage:

Contact to Contact Sea Level. . . . . 2700 VRMS Minimum

Contact to Ground Sea Level. . . . . 3300 VRMS Minimum

Contact to Contact 70,000 Ft.. . . . . .560 VRMS Minimum

Contact to Ground 70,000 Ft.. . . . . 675 VRMS Minimum

MECHANICAL

Creepage Between Contacts. . . . . .0.17 Minimum

Air Space Between Contacts. . . . . .0.11 Minimum

Contacts to Accept 0.030 ± 0.001 DIA. Pins

Contacts:

Spring Temper Grade “A” Phosphor Bronze or Heat Treated Beryllium Copper

Gold Plated over Copper or Nickel Plate

Mounting Hardware:

Special Studs, Screws, Lockwashers, and Nuts

Insulation Material:

Choice of **MIL Approved** Thermosetting Insulations (See Page 45)

Temperature Ratings: -65°C to +125°C

Weight of Socket with Mountings: 0.25 oz.

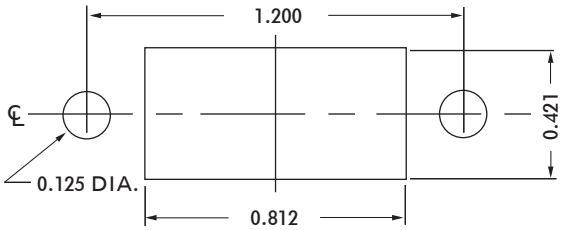

RECOMMENDED CHASSIS CUT-OUT

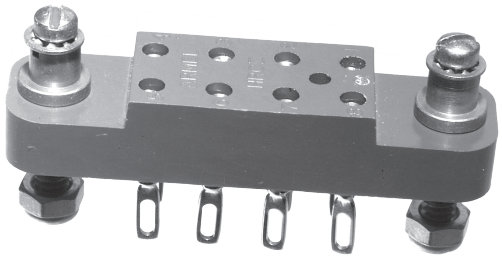

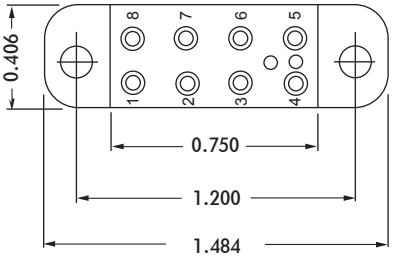

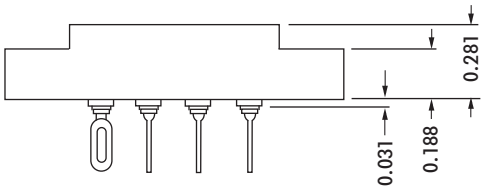

CONTACT DATA		CHASSIS MOUNTING DATA				
		CHASSIS THICKNESS	X-DIMENSION	X BELOW CHASSIS	X BELOW CHASSIS	0.23 ABOVE CHASSIS
OPEN ENTRY	SOLDER CUP (3/16)	1/16	.17	HRCZ - 1		HRCZ - 2
		3/32	.14		HRCZ - 31	HRCZ - 32
		1/8	.12		HRCZ - 41	HRCZ - 42
	EYELET (1/4)	1/16	.17	HRCZ - 5		HRCZ - 6
		3/32	.14		HRCZ - 35	HRCZ - 36
		1/8	.12		HRCZ - 45	HRCZ - 46
	STRAIGHT (3/16)	1/16				HRCZ - 4
		3/32				HRCZ - 34
		1/8				
CLOSED ENTRY	SOLDER CUP (7/32)	1/16	.17	HRCZ - 1K		HRCZ - 2K
		3/32	.14		HRCZ - 31K	HRCZ - 32K
		1/8	.12		HRCZ - 41K	HRCZ - 42K
	EYELET (1/4)	1/16	.17	HRCZ - 5K		HRCZ - 6K
		3/32	.14		HRCZ - 35K	HRCZ - 36K
		1/8	.12		HRCZ - 45K	HRCZ - 46K
	STRAIGHT (1/8)	1/16				HRCZ - 4K
		3/32				
		1/8				

ELECTRICAL

Wire Size:
- Solder Cup Type. . . . . .One #20 AWG
- Eyelet Type. . . . . .Two #20 AWG or Three #22 AWG

Current Rating. . . . . .3 Amperes

Withstanding Voltage:
- Contact to Contact Sea Level. . . . . .2700 VRMS Minimum
- Contact to Ground Sea Level. . . . . .3300 VRMS Minimum
- Contact to Contact 70,000 Ft.. . . . . 560 VRMS Minimum
- Contact to Ground 70,000 Ft.. . . . . 675 VRMS Minimum

MECHANICAL

Creepage Between Contacts. . . . . 0.17 Minimum
Air Space Between Contacts. . . . . 0.11 Minimum
Contacts to Accept 0.030 ± 0.001 DIA. Pins

Contacts:
- Spring Temper Grade “A” Phosphor Bronze, or
- Heat Treated Beryllium Copper
- Gold Plated over Copper or Nickel Plate

Mounting Hardware:
- Special Studs, Screws, Lockwashers, and Nuts

Insulation Material:
- Choice of **MIL Approved** Thermosetting Insulations (See Page 45)

Temperature Ratings: -65°C to +125°C
Weight of Socket with Mountings: 0.23 oz.

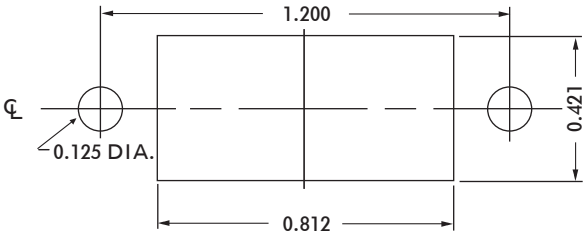

RECOMMENDED CHASSIS CUT-OUT

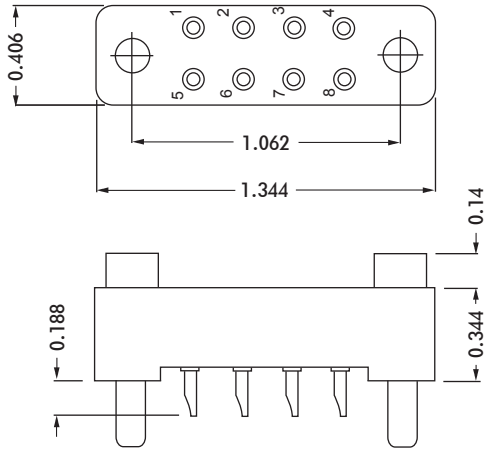

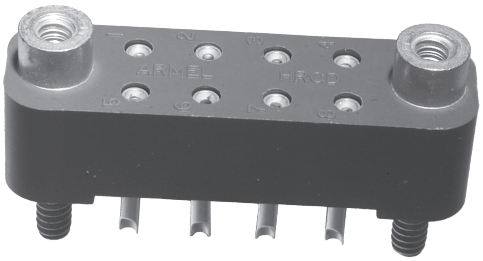

CONTACT DATA		CHASSIS MOUNTING DATA		
		CHASSIS THICKNESS	STUD (0.28)	RIVET (0.11)
OPEN ENTRY	SOLDER CUP (3/16)	1/16 – 1/8	HRCD-2	
		1/16		HRCD-22
	EYELET (1/4)	1/16 – 1/8	HRCD-6	
		1/16		HRCD-26
	STRAGHT (3/16)	1/16 – 1/8	HRCD-24	
		1/16		HRCD-4
CLOSED ENTRY	SOLDER CUP (7/32)	1/16 – 1/8	HRCD-2K	
		1/16		HRCD-22K
	EYELET (1/4)	1/16 – 1/8	HRCD-6K	
		1/16		HRCD-26K
	STRAIGHT (1/8)	1/16	HRCD-24K	HRCD-4K

ELECTRICAL

Wire Size:

Solder Cup Type. . . . . One #20 AWG

Eyelet Type. . . . . Two #20 AWG or Three #22 AWG

Current Rating. . . . . 3 Amperes

Withstanding Voltage:

Contact to Contact Sea Level. . . . 2700 VRMS Minimum

Contact to Ground Sea Level. . . . 2700 VRMS Minimum

Contact to Contact 70,000 Ft. . . . .560 VRMS Minimum

Contact to Ground 70,000 Ft. . . . .560 VRMS Minimum

MECHANICAL

Creepage Between Contacts. . . . . 0.16 Minimum

Air Space Between Contacts. . . . . 0.11 Minimum

Contacts to Accept 0.030 ± 0.001 DIA. Pins

Contacts:

Spring Temper Grade "A" Phosphor Bronze, or
Heat Treated Beryllium Copper
Gold Plated over Copper or Nickel Plate

Mounting Hardware:

Special Stud, Screws, Lockwashers, and Nuts

Insulation Material:

Choice of **MIL Approved** Thermosetting Insulations (See Page 45)

Temperature Ratings: -65°C to +125°C

Weight of Socket with Mountings: 0.26 oz.

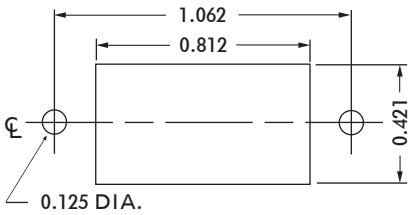

RECOMMENDED CHASSIS CUT-OUT

HRCW SERIES

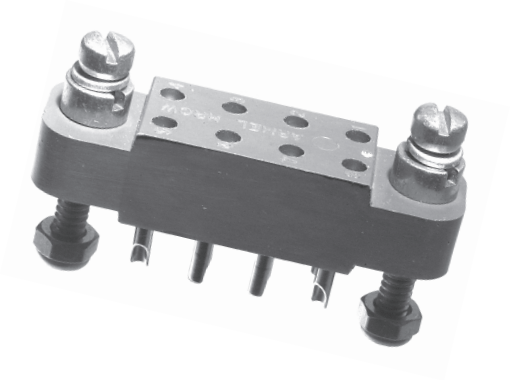

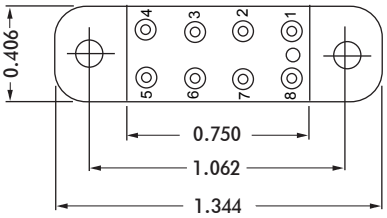

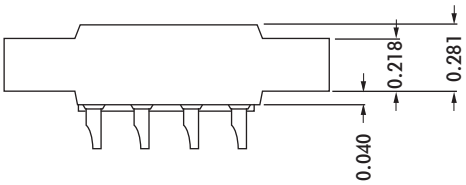

CONTACT DATA		CHASSIS MOUNTING DATA				
		CHASSIS THICKNESS	X-DIMENSION	BELOW CHASSIS (X)	BELOW CHASSIS (X)	ABOVE CHASSIS (0.19)
OPEN ENTRY	SOLDER CUP (3/16)	1/16	.14		HRCW - 1	HRCW - 22
		3/32	.11		HRCW - 31	HRCW - 32
		1/8	.08			HRCW - 42
	EYELET (1/4)	1/16	.14		HRCW - 5	HRCW - 6
		3/32	.11		HRCW - 35	HRCW - 36
		1/8	.08			HRCW - 46
	STRAIGHT (3/16)	1/16	.14			HRCW - 24
		3/32	.11			
		1/8	.08			
CLOSED ENTRY	SOLDER CUP (3/16)	1/16	.14		HRCW - 1K	HRCW - 22K
		3/32	.11		HRCW - 31K	HRCW - 32K
		1/8	.08			HRCW - 42K
	EYELET (1/4)	1/16	.14		HRCW - 5K	HRCW - 6K
		3/32	.11		HRCW - 35K	HRCW - 36K
		1/8	.08			HRCW - 46K
	STRAIGHT (1/8)	1/16				HRCW - 24K
		3/32				
		1/8				

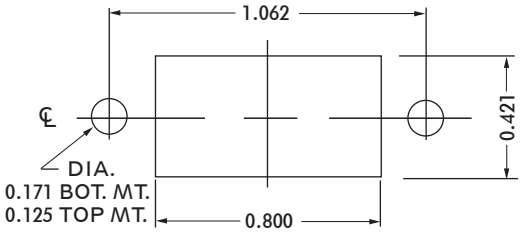

RECOMMENDED CHASSIS CUT-OUT

ELECTRICAL

Wire Size:

Solder Cup Type. . . . . .One #20 AWG
Eyelet Type. . . . . .Two #20 AWG or Three #22 AWG

Current Rating. . . . . .3 Amperes

Withstanding Voltage:

Contact to Contact Sea Level. . .2700 VRMS Minimum
Contact to Ground Sea Level. . .2250 VRMS Minimum
Contact to Contact 70,000 Ft. . .560 VRMS Minimum
Contact to Ground 70,000 Ft. . . 500 VRMS Minimum

MECHANICAL

Creepage Between Contacts. . . . . 0.16 Minimum
Air Space Between Contacts. . . . . 0.11 Minimum
Contacts to Accept 0.030 ± 0.001 DIA. Pins

Contacts:

Spring Temper Grade "A" Phosphor Bronze,or
Heat Treated Beryllium Copper
Gold Plated over Copper or Nickel Plate

Mounting Hardware:

Special Studs, Screws, Lockwashers, and Nuts

Insulation Material:

Choice of **MIL Approved** Thermosetting Insulations (See Page 45)

Temperature Ratings: -65°C to +125°C
Weight of Socket with Mountings: 0.27 oz.

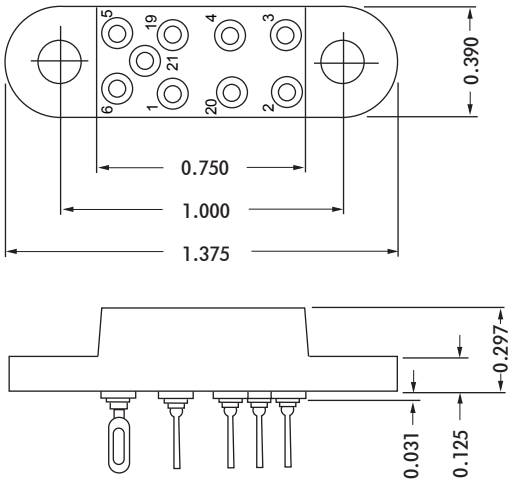

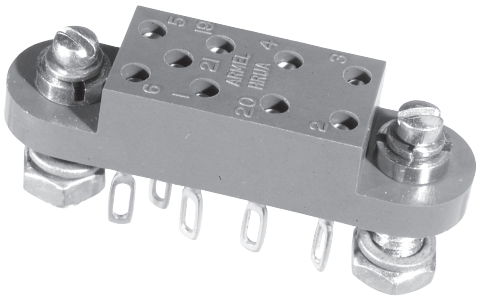

ELECTRICAL

Wire Size:

Solder Cup Type. . . . . .One #20 AWG

Eyelet Type. . . . . .Two #20 AWG or Three #22 AWG

Current Rating. . . . . 3 Amperes

Withstanding Voltage:

Contact to Contact Sea Level. . . .1500 VRMS Minimum

Contact to Ground Sea Level. . . .1000 VRMS Minimum

Contact to Contact 70,000 Ft. . . . .375 VRMS Minimum

Contact to Ground 70,000 Ft. . . . . 300 VRMS Minimum

MECHANICAL

Creepage Between Contacts. . . . . 0.11 Minimum

Air Space Between Contacts. . . . . 0.05 Minimum

Contacts to Accept 0.030 ± 0.001 DIA. Pins

Contacts:

Spring Temper Grade “A” Phosphor Bronze, or
Heat Treated Beryllium Copper
Gold Plated over Copper or Nickel Plate

Mounting Hardware:

Special Studs, Screws, Lockwashers, and Nuts

Insulation Material:

Choice of **MIL Approved** Thermosetting Insulations (See Page 45)

Temperature Ratings: -65°C to +125°C

Weight of Socket with Mountings: 0.24 oz.

CONTACT DATA	CHASSIS MOUNTING DATA				
	CHASSIS THICKNESS	X-DIMENSION	X — BELOW CHASSIS	X — BELOW CHASSIS	0.26 — ABOVE CHASSIS
SOLDER CUP (3/16)	1/16				
	3/32	.06		HRUA - 31	
	1/8				
EYELET (1/4)	1/16				
	3/32	.06		HRUA - 35	
	1/8				
STRAIGHT (3/16)	1/16				
	3/32				
	1/8				

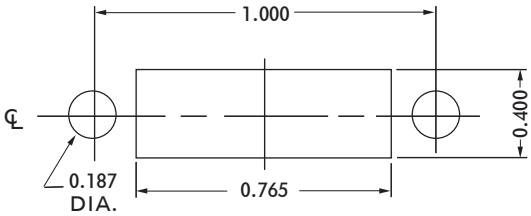

RECOMMENDED CHASSIS CUT-OUT

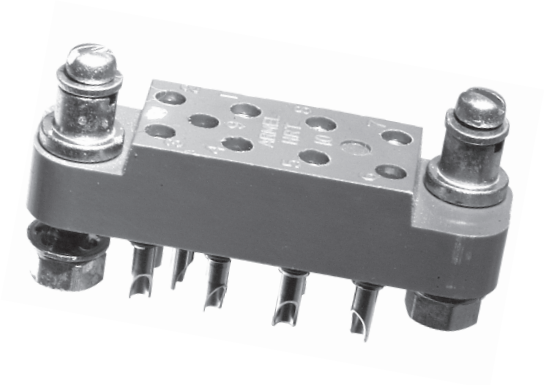

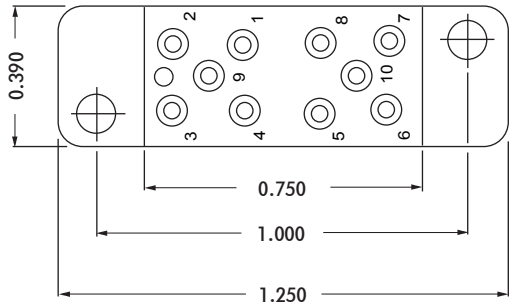

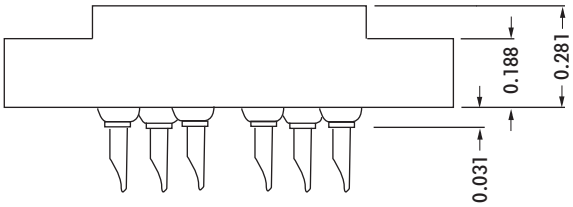

CONTACT DATA		CHASSIS MOUNTING DATA				
		CHASSIS THICKNESS	X-DIMENSION	0.17 BELOW CHASSIS	0.17 BELOW CHASSIS	0.23 ABOVE CHASSIS
OPEN ENTRY	SOLDER CUP (3/16)	1/16	10	HRT - 1		HRT - 2
			9	HRT - 7		HRT - 8
			8	HRT - 13		HRT - 14
	EYELET (1/4)	1/16	10	HRT - 5		HRT - 6
			9	HRT - 11		HRT - 12
			8	HRT - 17		HRT - 18
	STRAIGHT (3/16)	1/16	10	HRT - 3		HRT - 4
			9	HRT - 9		HRT - 10
			8	HRT - 15		HRT - 16
CLOSED ENTRY	SOLDER CUP (3/16)	1/16	10	HRT - 1K		HRT - 2K
			9	HRT - 7K		HRT - 8K
			8	HRT - 13K		HRT - 14K
	EYELET (1/4)	1/16	10	HRT - 5K		HRT - 6K
			9	HRT - 11K		HRT - 12K
			8	HRT - 17K		HRT - 18K
	STRAIGHT (1/8)	1/16	10	HRT - 3K		HRT - 4K
			9	HRT - 9K		HRT - 10K
			8	HRT - 15K		HRT - 16K

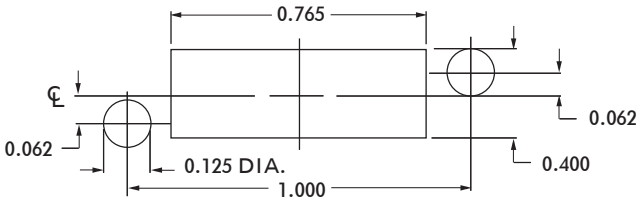

RECOMMENDED CHASSIS CUT-OUT

ELECTRICAL

Wire Size:
- Solder Cup Type. . . . . .One #20 AWG
- Eyelet Type. . . . . .Two #20 AWG or Three #22 AWG

Current Rating. . . . . 3 Amperes

Withstanding Voltage:
- Contact to Contact Sea Level. .1500 VRMS Minimum
- Contact to Ground Sea Level. .1500 VRMS Minimum
- Contact to Contact 70,000 Ft. . .375 VRMS Minimum
- Contact to Ground 70,000 Ft. . . 375 VRMS Minimum

MECHANICAL

Creepage Between Contacts . . . . . 0.11 Minimum

Air Space Between Contacts. . . . . 0.05 Minimum

Contacts to Accept 0.030 ± 0.001 DIA. Pins

Contacts:
- Spring Temper Grade “A” Phosphor Bronze, or
- Heat Treated Beryllium Copper
- Gold Plated over Copper or Nickel Plate

Mounting Hardware:
- Special Studs, Screws, Lockwashers, and Nuts

Insulation Material:
- Choice of **MIL Approved** Thermosetting Insulations (See Page 45)

Temperature Ratings: -65°C to +125°C

Weight of Socket with Mountings: 0.26 oz.

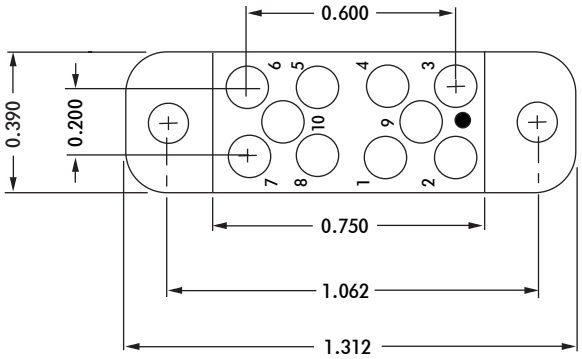

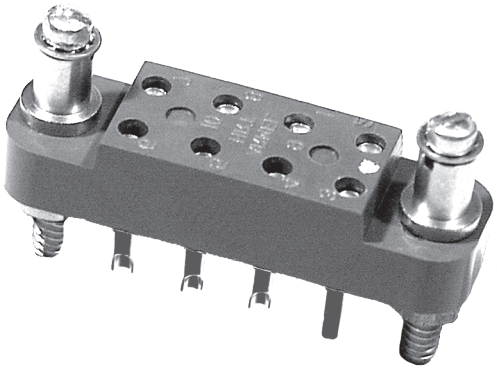

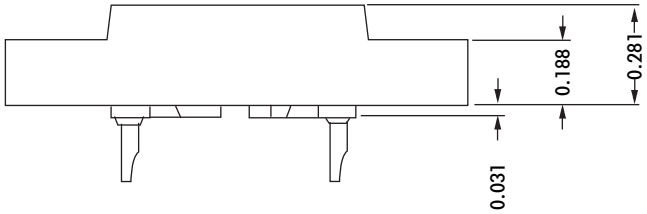

CONTACT DATA		CHASSIS MOUNTING DATA				
		CHASSIS THICKNESS	X-DIMENSION	BELOW CHASSIS	BELOW CHASSIS	ABOVE CHASSIS
OPEN ENTRY	SOLDER CUP	1/16	.17	HRTA - 1		HRTA - 2
		3/32	.14		HRTA - 31	
		1/8	.12		HRTA - 41	
	EYELET	1/16	.17	HRTA - 5		
		3/32	.14		HRTA - 35	
		1/8	.12		HRTA - 45	
	STRAIGHT	1/16				HRTA - 4
		3/32				HRTA - 34
		1/8				
CLOSED ENTRY	SOLDER CUP	1/16	.17	HRTA - 1K		HRTA - 2K
		3/32	.14			
		1/8	.12			
	EYELET	1/16	.17	HRTA - 5K		
		3/32	.14		HRTA - 35K	
		1/8	.12		HRTA - 45K	
	STRAIGHT	1/16				HRTA - 4K
		3/32				HRTA - 34K
		1/8				

ELECTRICAL:

Wire Size

Solder Cup Type. . . . . One #20 AWG

Eyelet Type. . . . . Two #20 AWG or Three #22 AWG

Current Rating. . . . . 3 Amperes

Withstanding Voltage:

Contact to Contact Sea Level. . .1500 VRMS Minimum

Contact to Ground Sea Level. . .1500 VRMS Minimum

Contact to Contact 70,000 Ft. . . .375 VRMS Minimum

Contact to Ground 70,000Ft. . . . .375 VRMS Minimum

MECHANICAL:

Creepage Between Contacts. . . . . 0.17 Minimum

Air Space Between Contacts. . . . . 0.11 Minimum

Contacts to Accept 0.030 ± 0.001 DIA. Pins

Contacts:

Spring Temper Grade "A" Phosphor Bronze or Heat Treated Beryllium Copper

Gold Plated over Copper or Nickel Plate

Mounting Hardware:

Special Studs, Screws, Lockwashers, and Nuts

Insulation Material

Choice of **MIL Approved** Thermosetting Insulations (See Page 45)

Temperature Ratings: -65°C to +125°C

Weight of Socket with Mountings: 0.30 oz.

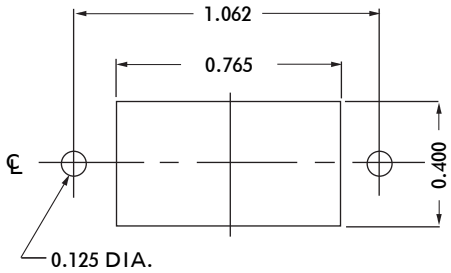

RECOMMENDED CHASSIS CUT-OUT

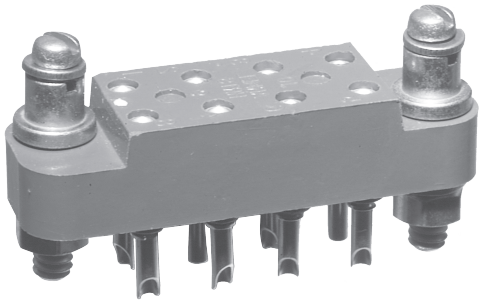

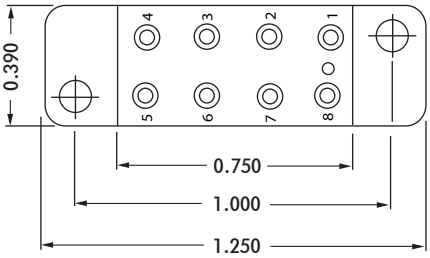

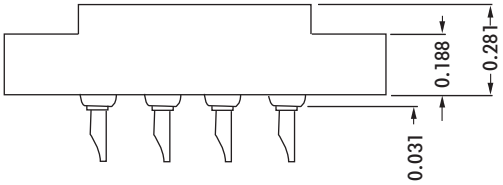

CONTACT DATA		CHASSIS MOUNTING DATA				
		CHASSIS THICKNESS	X-DIMENSION	BELOW CHASSIS (X)	BELOW CHASSIS (X)	ABOVE CHASSIS (0.23)
OPEN ENTRY	SOLDER CUP (3/16)	1/16	.17	HRTS - 13		HRTS - 14
		3/32	.14			
		1/8	.12			
	EYELET (1/4)	1/16	.17	HRTS - 17		HRTS - 18
		3/32	.14			
		1/8	.12			
	STRAIGHT (3/16)	1/16	.17	HRTS - 15		HRTS - 16
		3/32				
		1/8	.17	HRTS - 44		
	WIRE WRAP (0.045 SQ., 0.80)	1/16	.17	HRTS - 518		HRTS - 412
CLOSED ENTRY	SOLDER CUP (3/16)	1/16	.17	HRTS - 13K		HRTS - 14K
		3/32	.14			
		1/8	.12			
	EYELET (1/4)	1/16	.17	HRTS - 17K		HRTS - 18K
		3/32	.14			
		1/8	.12			
	STRAIGHT (1/8)	1/16				HRTS - 16K
		3/32				
		1/8				
	WIRE WRAP (0.025 SQ., 0.72)	1/16	.17	HRTS - 518K		HRTS - 519K

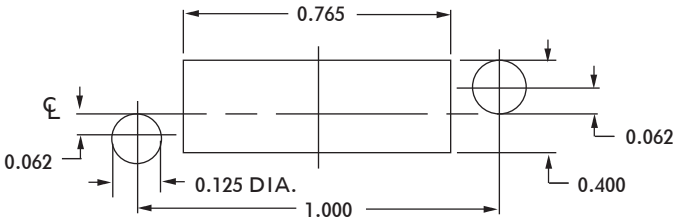

RECOMMENDED CHASSIS CUT-OUT

ELECTRICAL:

Wire Size
Solder Cup Type. . . . . .One #20 AWG
Eyelet Type. . . . . .Two #20 AWG or Three #22 AWG
Current Rating. . . . . .3 Amperes
Withstanding Voltage:
- Contact to Contact Sea Level. . . .2700 VRMS Minimum
- Contact to Ground Sea Level. . . .1500 VRMS Minimum
- Contact to Contact 70,000 Ft. . . . .560 VRMS Minimum
- Contact to Ground 70,000 Ft. . . . .375 VRMS Minimum

MECHANICAL

Creepage Between Contacts. . . . . 0.17 Minimum
Air Space Between Contacts. . . . . 0.11 Minimum
Contacts to Accept 0.030 $^{+}_{-}$ 0.001 DIA. Pins

Contacts:
- Spring Temper Grade "A" Phosphor Bronze, or
- Heat Treated Beryllium Copper
- Gold Plated over Copper or Nickel Plate

Mounting Hardware:
- Special Studs, Screws, Lockwashers, and Nuts

Insulation Material:
- Choice of **MIL Approved** Thermosetting Insulations (See Page 45)

Temperature Ratings: -65°C to + 125°C
Weight of Socket with Mountings: 0.26 oz.

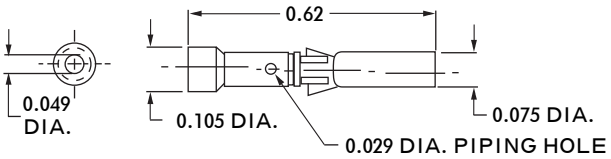

Closed Entry Contact
No. 1007010-1

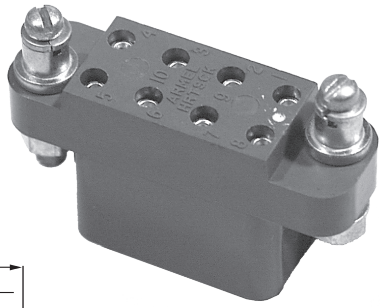

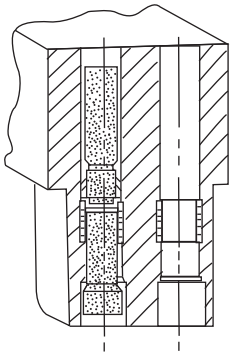

Crimp
Removable Contacts

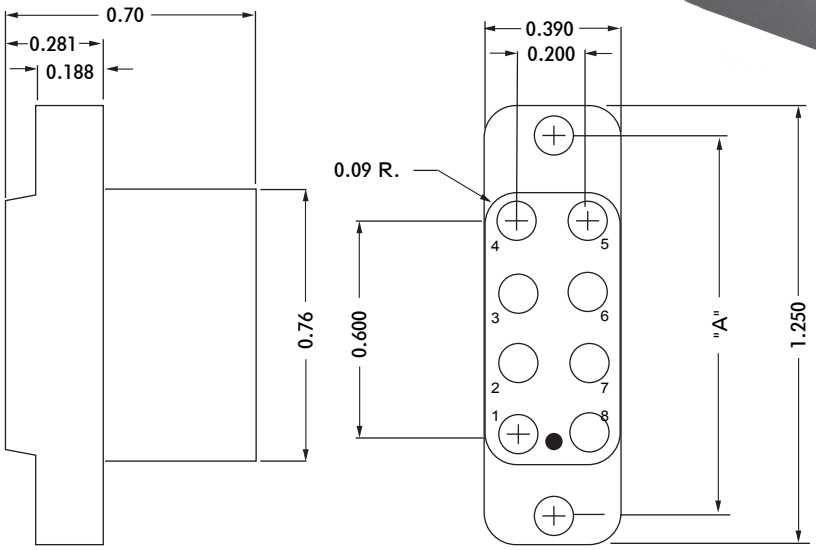

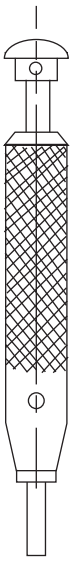

Removing Tool
No. T9066-2

SPECIFICATIONS

ELECTRICAL

Current Rating . . . . . 3 Amperes
Contact Size. . . . . 0.030 inch
Terminal Accomodation. . . . . One No.20, One No.22,
One or Two No. 24 AWG Wire

Withstanding Voltage:
Contact to Contact Sea Level. . . . . 2700 VRMS Minimum
Contact to Ground Sea Level. . . . . 1500 VRMS Minimum
Contact to Contact 70,000 Ft. . . . . 560 VRMS Minimum
Contact to Ground 70,000 Ft. . . . . 375 VRMS Minimum

MECHANICAL

Creepage Between Contacts. . . . . 0.12 Minimum
Air Space Between Contacts. . . . . 0.09 Minimum
Contacts to Accept 0.030 ± 0.001 DIA. Pins

Contact Material & Plating. . . . . Phosphor Bronze, Gold Plated
(Sleeve - Brass) (0.000050 Inch) Per MIL-G-45204
Type II, Class 1 over Copper Plate
Contact Retaining Clip. . . . . .Stainless Steel, Passivated
Crimping Tool. . . . . No. MS 3191A
Positioner. . . . . No. KP7010
Insertion Tool. . . . . Not required

Mounting Hardware:
Special Studs, Screws, Lockwashers, and Nuts

Insulation Material:
Choice of **MIL Approved** Thermosetting
Insulations (See Page 45)

Temperature Ratings: -65°C to +125°C
Weight of Socket with Mountings: 0.45 oz.

PART NO.	NUMBER OF CONTACTS	"A"
HRTS-CK-13	8	1.000
HRTS-CK-103	10	1.000
HRTS-CK-2003	8	1.078

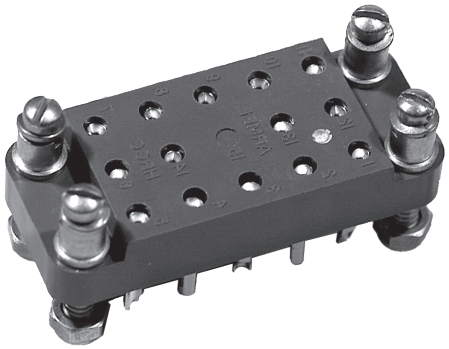

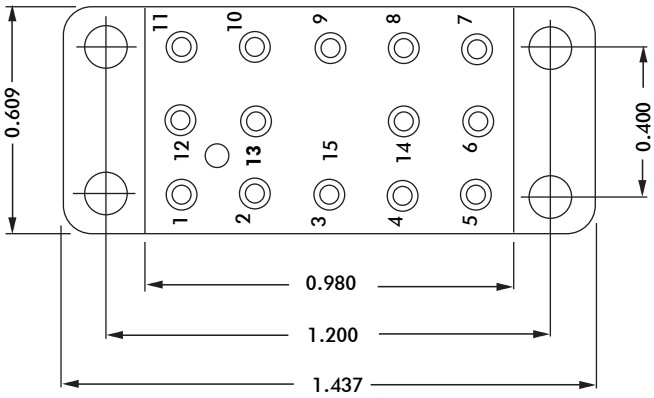

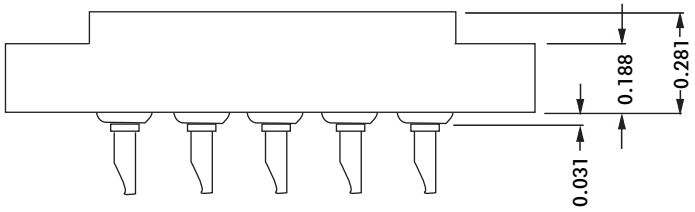

CONTACT DATA		CHASSIS MOUNTING DATA				
		CHASSIS THICKNESS	X-DIMENSION	BELOW CHASSIS	BELOW CHASSIS	ABOVE CHASSIS
OPEN ENTRY	SOLDER CUP (3/16)	1/16	.17	HRCC - 1		HRCC - 2
		3/32	.14		HRCC - 31	HRCC - 32
		1/8	.12		HRCC - 41	HRCC - 42
	EYELET (1/4)	1/16	.17	HRCC - 5		HRCC - 6
		3/32	.14		HRCC - 35	HRCC - 36
		1/8	.12		HRCC - 45	HRCC - 46
	STRAIGHT (3/16)	1/16				HRCC - 4
		3/32				HRCC - 34
		1/8				
	0.045 SQ. WIRE WRAP (0.80)	1/16	.17	HRCC - 718		HRCC - 719
		3/32				
		1/8				
CLOSED ENTRY	SOLDER CUP (3/16)	1/16	.17	HRCC - 1K		HRCC - 2K
		3/32	.14		HRCC - 31K	HRCC - 32K
		1/8	.12		HRCC - 41K	HRCC - 42K
	EYELET (1/4)	1/16	.17	HRCC - 5K		HRCC - 6K
		3/32	.14		HRCC - 35K	HRCC - 36K
		1/8	.12		HRCC - 45K	HRCC - 46K
	STRAIGHT (1/8)	1/16				HRCC - 4K
		3/32				
		1/8				
	0.025 SQ. WIRE WRAP (1/2)	1/16	.17	HRCC - 513K		HRCC - 18K
		3/32	.23	HRCC - 13K		
		1/8				

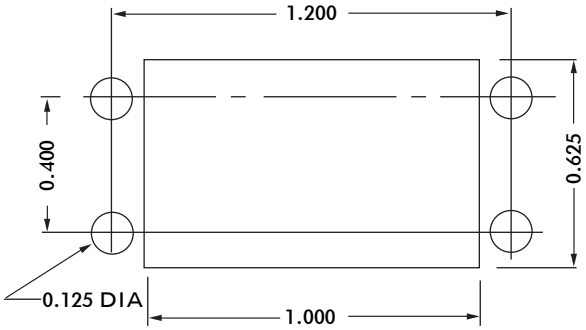

RECOMMENDED CHASSIS CUT-OUT

ELECTRICAL

Wire Size:
- Solder Cup Type. . . . . .One #20 AWG
- Eyelet Type. . . . . .Two #20 AWG or Three #22 AWG

Current Rating. . . . . 3 Amperes

Withstanding Voltage:
- Contact to Contact Sea Level. . . . . 2700 VRMS Minimum
- Contact to Ground Sea Level. . . . . 1500 VRMS Minimum
- Contact to Contact 70,000 Ft.. . . . . 560 VRMS Minimum
- Contact to Ground 70,000 Ft.. . . . . .375 VRMS Minimum

MECHANICAL

Creepage Between Contacts. . . . . 0.17 Minimum

Air Space Between Contacts. . . . . .0.11 Minimum

Contacts to Accept 0.030 ± 0.001 DIA. Pins

Contacts:
- Spring Temper Grade “A” Phosphor Bronze, or
- Heat Treated Beryllium Copper
- Gold Plated over Copper or Nickel Plate

Mounting Hardware:
- Special Studs, Screws, Lockwashers, and Nuts

Insulation Material:
- Choice of **MIL Approved** Thermosetting Insulations (See Page 45)

Temperature Ratings: -65°C to +125°C

Weight of Socket with Mountings: 0.43 oz.

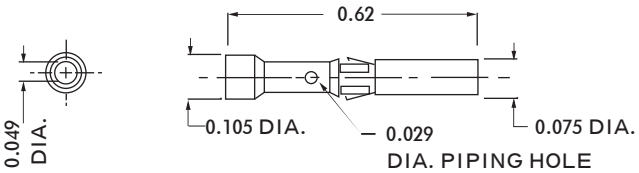

Closed Entry Contact
No. 1007010-1

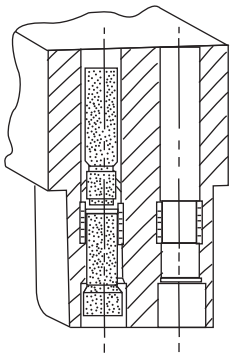

Crimp
Removable Contacts

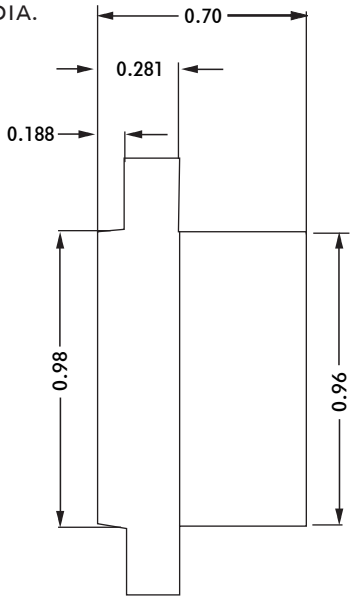

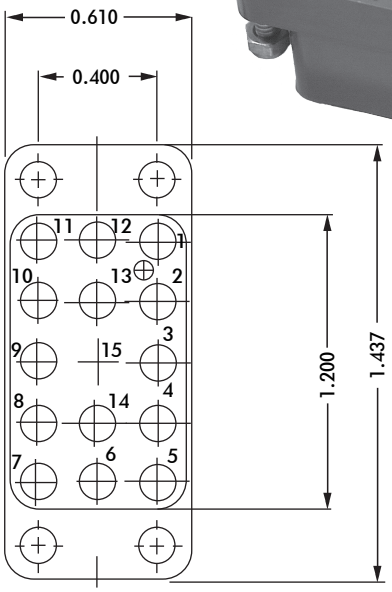

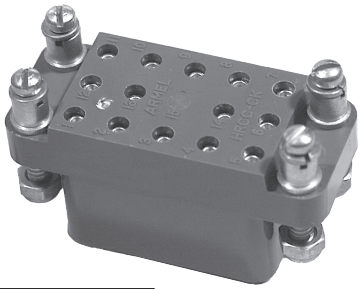

SPECIFICATIONS

ELECTRICAL

Current Rating . . . . . 3 Amperes
Contact Size. . . . . 0.030 Inch
Withstanding Voltage
- Contact to Contact Sea Level . . . . . 2700 VRMS Minimum
- Contact to Ground Sea Level . . . . . 1500 VRMS Minimum
- Contact to Contact 70,000 Ft. . . . . .560 VRMS Minimum
- Contact to Ground 70,000 Ft. . . . . 375 VRMS Minimum

MECHANICAL

Creepage Between Contacts. . . . . .0.12 Min.
Air Space Between Contacts. . . . . .0.09 Min.

Terminal Accommodation. . . . . One No. 20, One No. 22, One or Two No. 24 AWG Wire
Contact Material & Plating. . . . . Phosphor Bronze, Gold Plated (0.000050 inch) per MIL-G-45204, Type II, Class 1, Over Copper Plate
(Sleeve-Brass)
Contact Retaining Clip. . . . . .Stainless Steel, Passivated
Crimping Tool. . . . . .No. MS 3191A
Positioner. . . . . .No. KP7010
Insertion Tool. . . . . Not Required

Mounting Hardware:
- Special Studs, Screws Lockwashers and Nuts

Insulation Material:
- Choice of **MIL Approved** Thermosetting Insulations (See Page 45)

Temperature Ratings: -65°C to +125°C
Weight of Socket with Mountings: 0.75 oz.

Removing Tool
No. T9066-2

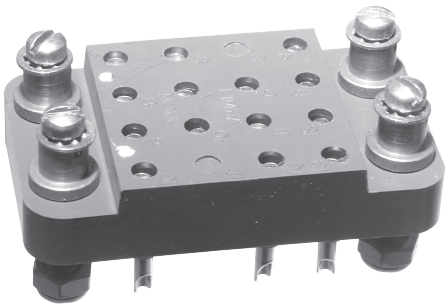

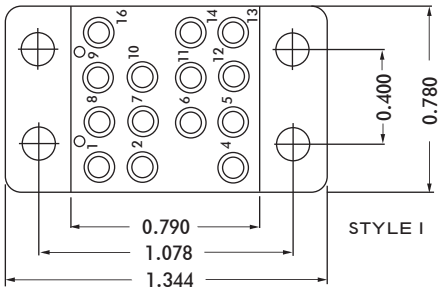

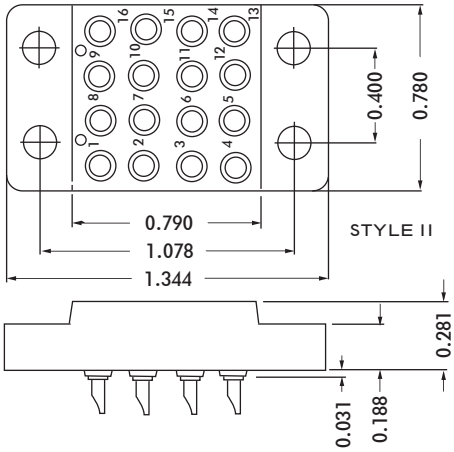

CONTACT DATA		CHASSIS MOUNTING DATA: CHASSIS THICKNESS	X-DIMENSION	STYLE	NO. OF CONTACTS	BELOW CHASSIS (X)	BELOW CHASSIS (X)	ABOVE CHASSIS (0.23)
OPEN ENTRY	SOLDER CUP (3/16)	1/16	.17	I	14	HRCM-1		HRCM-2
				II	16	HRCM-601		HRCM-602
		3/32	.14	I	14		HRCM-31	HRCM-32
				II	16		HRCM-631	HRCM-632
		1/8	.12	I	14		HRCM-41	HRCM-42
				II	16		HRCM-641	HRCM-642
	EYELET (1/4)	1/16	.17	I	14	HRCM-5		HRCM-6
				II	16	HRCM-605		HRCM-606
		3/32	.14	I	14		HRCM-35	HRCM-36
				II	16		HRCM-635	HRCM-636
		1/8	.12	I	14		HRCM-45	HRCM-46
				II	16		HRCM-645	HRCM-646
	STRAIGHT (3/16)	1/16		I	14			HRCM-4
				II	16			HRCM-604
		3/32		I	14			
				II	16			
		1/8		I	14			
				II	16			
CLOSED ENTRY	SOLDER CUP (3/16)	1/16	.17	I	14	HRCM-1K		HRCM-2K
				II	16	HRCM-601K		HRCM-602K
		3/32	.14	I	14		HRCM-31K	HRCM-32K
				II	16		HRCM-631K	HRCM-632K
		1/8	.12	I	14		HRCM-41K	HRCM-42K
				II	16		HRCM-641K	HRCM-642K
	EYELET (1/4)	1/16	.17	I	14	HRCM-5K		HRCM-6K
				II	16	HRCM-605K		HRCM-606K
		3/32	.14	I	14		HRCM-35K	HRCM-36K
				II	16		HRCM-635K	HRCM-636K
		1/8	.12	I	14		HRCM-45K	HRCM-46K
				II	16		HRCM-645K	HRCM-646K
	STRAIGHT (1/8)	1/16		I	14			HRCM-4K
				II	16			HRCM-604K
		3/32		I	14			
				II	16			
		1/8		I	14			
				II	16			

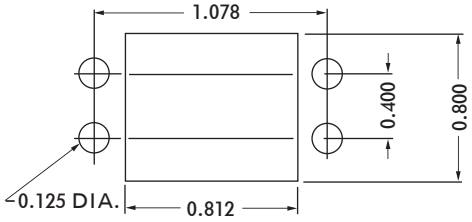

RECOMMENDED CHASSIS CUT-OUT

ELECTRICAL

Wire Size:
- Solder Cup Type. . . . . .One #20 AWG
- Eyelet Type. . . . . .Two #20 AWG or Three #22 AWG

Current Rating. . . . . .3 Amperes

Withstanding Voltage:
- Contact to Contact Sea Level. . . . .2700 VRMS Minimum
- Contact to Ground Sea Level. . . . .2250 VRMS Minimum
- Contact to Contact 70,000 Ft. . . . . .560 VRMS Minimum
- Contact to Ground 70,000 Ft. . . . . 500 VRMS Minimum

MECHANICAL

Creepage Between Contacts. . . . . 0.17 Minimum

Air Space Between Contacts. . . . . 0.11 Minimum

Contacts to Accept 0.030 ± 0.001 DIA. Pins

Contacts:
- Spring Temper Grade "A" Phosphor Bronze, or
- Heat Treated Beryllium Copper
- Gold Plated over Copper or Nickel Plate

Mounting Hardware:
- Special Studs, Screws, Lockwashers, and Nuts

Insulation Material:
- Choice of **MIL Approved** Thermosetting Insulations (See Page 45)

Temperature Ratings: -65°C to +125°C

Weight of Socket with Mountings: 0.43 oz.

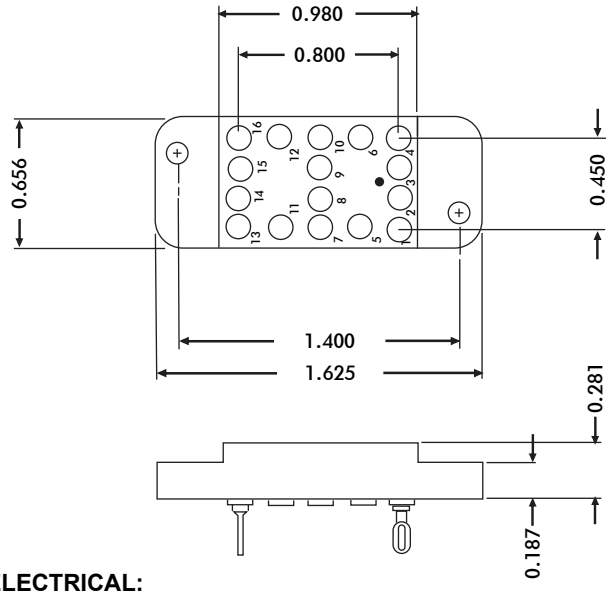

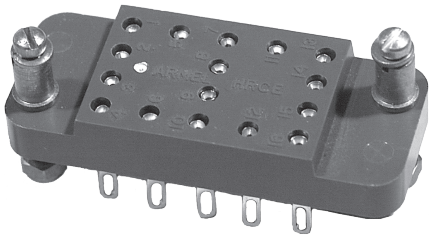

ELECTRICAL:

Wire Size:

Solder Cup Type. . . . . .One #20 AWG
Eyelet Type. . . . . Two #20 AWG or Three #22 AWG

Current Rating. . . . . 3 Amperes

Withstanding Voltage:

Contact to Contact Sea Level. . . 1200 VRMS Minimum
Contact to Ground Sea Level. . . .3300 VRMS Minimum
Contact to Contact 70,000 Ft. . . . .300 VRMS Minimum
Contact to Ground 70,000 Ft. . . . .675 VRMS Minimum

MECHANICAL:

Creepage Between Contacts. . . . . 0.12 Minimum
Air Space Between Contacts. . . . . 0.05 Minimum
Contacts to Accept 0.030 ± 0.001 DIA. Pins

Contacts:

Spring Temper Grade "A" Phosphor Bronze or
Heat Treated Beryllium Copper
Gold Plated over Copper or Nickel Plate

Mounting Hardware:

Special Studs, Screws, Lockwashers, and Nuts

Insulation Material:

Choice of **MIL Approved** Thermosetting Insulations (See Page 45)

Temperature Ratings: -65°C to +125°C
Weight of Socket with Mountings: 0.45 oz.

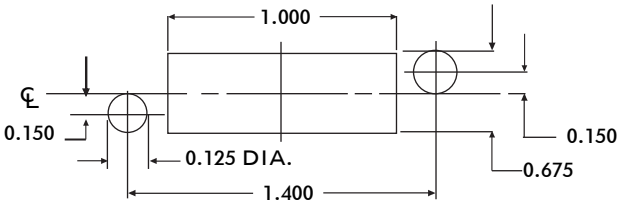

RECOMMENDED CHASSIS CUT-OUT

CONTACT DATA		CHASSIS MOUNTING DATA				
		CHASSIS THICKNESS	X-DIMENSION	BELOW CHASSIS	BELOW CHASSIS	ABOVE CHASSIS
OPEN ENTRY	SOLDER CUP (3/16)	1/16	.17	HRCE - 1		HRCE - 2
		3/32	.14			
		1/8	.12			
	EYELET (1/4)	1/16	.17	HRCE - 6		HRCE - 5
		3/32	.14			
		1/8	.12			
	STRAIGHT (1/8)	1/16				HRCE - 4
		3/32				
		1/8				
	STRAIGHT (3/16)	1/16				
		3/32				HRCE - 24
		1/8				
	WIRE WRAP (0.045 SQ., 0.80)	1/16	.17	HRCE - 28		
		3/32	.14			
		1/8	.12			
	WIRE WRAP (0.025 SQ., 0.68)	1/16	.17	HRCE - 18		
		3/32	.14			
		1/8	.12			
CLOSED ENTRY	SOLDER CUP (3/16)	1/16	.17	HRCE - 1K		HRCE - 2K
		3/32	.14			
		1/8	.12			
	EYELET (1/4)	1/16	.17	HRCE - 6K		HRCE - 5K
		3/32	.14			
		1/8	.12			
	STRAIGHT (1/8)	1/16				HRCE - 4K
		3/32				
		1/8				
	STRAIGHT (15/64)	1/16				HRCE - 24K
		3/32				
		1/8				
	WIRE WRAP (0.045 SQ., 5/8)	1/16	.17	HRCE - 28K		
		3/32	.14			
		1/8	.12			
	WIRE WRAP (0.025 SQ., 0.72)	1/16	.17	HRCE - 18K		
		3/32	.14			
		1/8	.12			

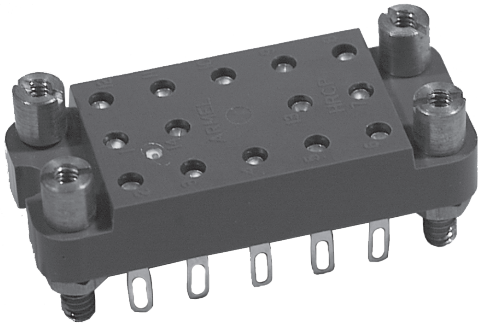

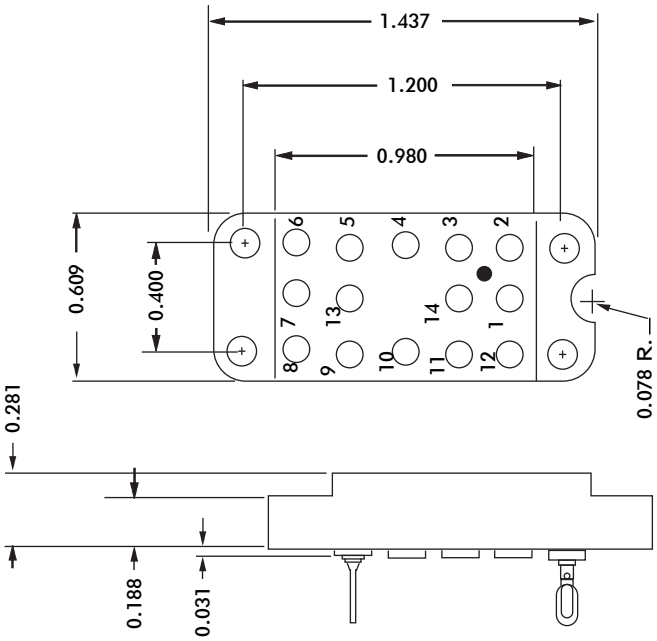

CONTACT DATA	CHASSIS MOUNTING DATA				
	CHASSIS THICKNESS	X-DIMENSION	BELOW CHASSIS	BELOW CHASSIS	ABOVE CHASSIS
SOLDER CUP	1/16	.17	HRCP-1		
	3/32	.14	HRCP-31		
	1/8	.12	HRCP-41		
EYELET	1/16	.17	HRCP-5		
	3/32	.14	HRCP-35		
	1/8	.12	HRCP-45		
STRAIGHT	1/16				HRCP-4
	3/32				HRCP-34
	1/8				HRCP-44

ELECTRICAL

Wire Size:

Solder Cup Type. . . . . .One #20 AWG

Eyelet Type. . . . . .Two #20 AWG or Three #22 AWG

Current Rating. . . . . 3 Amperes

Withstanding Voltage:

Contact to Contact Sea Level. . . . . 2700 VRMS Minimum

Contact to Ground Sea Level. . . . . 1500 VRMS Minimum

Contact to Contact 70,000 Ft.. . . . . 560 VRMS Minimum

Contact to Ground 70,000 Ft.. . . . . .375 VRMS Minimum

MECHANICAL

Creepage Between Contacts. . . . . 0.17 Minimum

Air Space Between Contacts. . . . . 0.11 Minimum

Contacts to Accept 0.030 ± 0.001 DIA. Pins

Contacts:

Spring Temper Grade “A” Phosphor Bronze, or
Heat Treated Beryllium Copper
Gold Plated over Copper or Nickel Plate

Mounting Hardware:

Special Studs, Screws, Lockwashers, and Nuts

Insulation Material:

Choice of **MIL Approved** Thermosetting Insulations (See Page 45)

Temperature Ratings: -65°C to +125°C

Weight of Socket with Mountings: 0.45 oz.

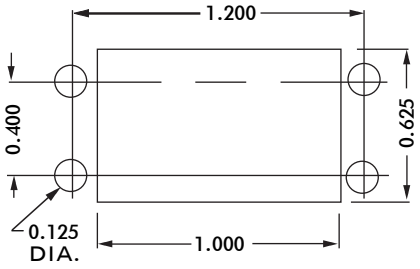

RECOMMENDED CHASSIS CUT-OUT

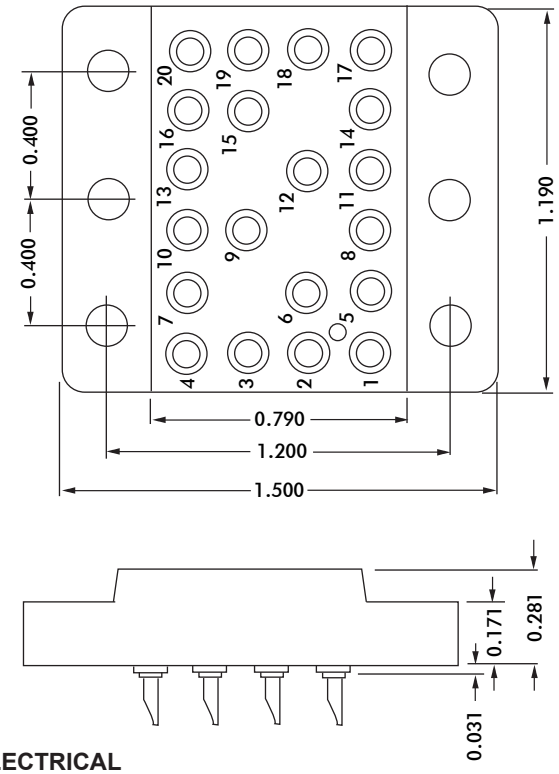

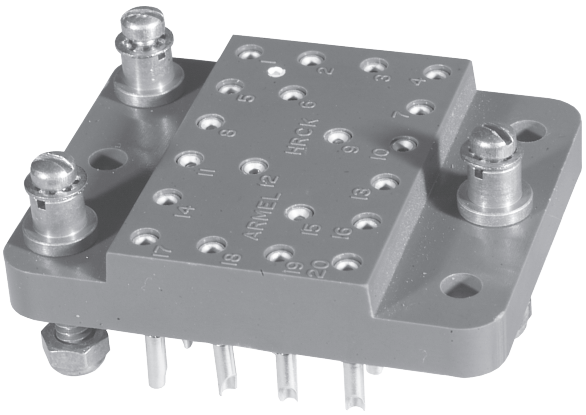

CONTACT DATA		CHASSIS MOUNTING DATA				
		CHASSIS THICKNESS	X-DIMENSION	BELOW CHASSIS	BELOW CHASSIS	ABOVE CHASSIS
OPEN ENTRY	SOLDER CUP	1/16	.17	HRCK-1		HRCK-2
		3/32	.14		HRCK-31	HRCK-32
		1/8	.12		HRCK-41	HRCK-42
	EYELET	1/16	.17	HRCK-5		HRCK-6
		3/32	.14		HRCK-35	HRCK-36
		1/8	.12		HRCK-45	HRCK-46
	STRAIGHT	1/16				HRCK-4
		3/32				HRCK-34
		1/8				
CLOSED ENTRY	SOLDER CUP	1/16	.17	HRCK-1K		HRCK-2K
		3/32	.14		HRCK-31K	HRCK-32K
		1/8	.12		HRCK-41K	HRCK-42K
	EYELET	1/16	.17	HRCK-5K		HRCK-6K
		3/32	.14		HRCK-35K	HRCK-36K
		1/8	.12		HRCK-45K	HRCK-46K
	STRAIGHT	1/16				HRCK-4K
		3/32				
		1/8				

ELECTRICAL

Wire Size:
- Solder Cup Type . . . . . One #20 AWG
- Eyelet Type . . . . . Two #20 AWG or Three #22 AWG

Current Rating . . . . . 3 Amperes

Withstanding Voltage:
- Contact to Contact Sea Level . . . . . 2700 VRMS Minimum
- Contact to Ground Sea Level . . . . . 3300 VRMS Minimum
- Contact to Contact 70,000 Ft. . . . . .560 VRMS Minimum
- Contact to Ground 70,000 Ft. . . . . 675 VRMS Minimum

MECHANICAL

Creepage Between Contacts. . . . . 0.17 Minimum
Air Space Between Contacts . . . . . .0.11 Minimum
Contacts to Accept 0.030 ± 0.001 DIA. Pins

Contacts:
- Spring Temper Grade "A" Phosphor Bronze, or
- Heat Treated Beryllium Copper
- Gold Plated over Copper or Nickel Plate

Mounting Hardware:
- Special Studs, Screws, Lockwashers, and Nuts

Insulation Material:
- Choice of **MIL Approved** Thermosetting Insulations (See Page 45)

Temperature Ratings: -65°C to +125°C
Weight of Socket with Mountings: 0.60 oz.

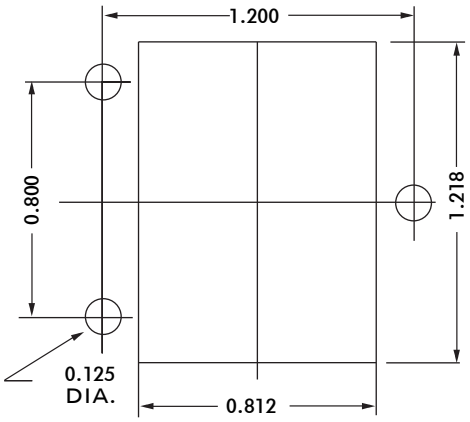

RECOMMENDED CHASSIS CUT-OUT

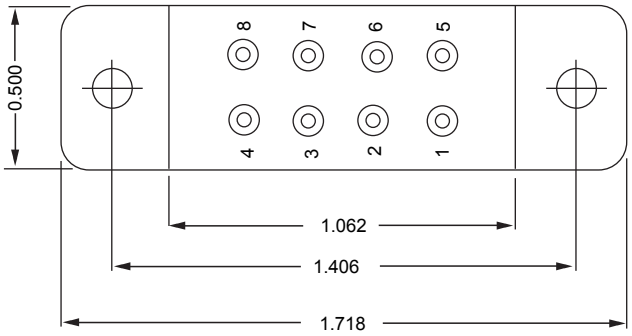

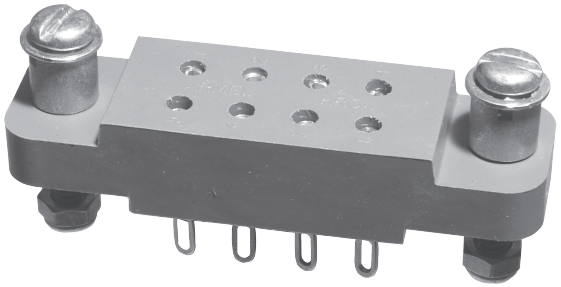

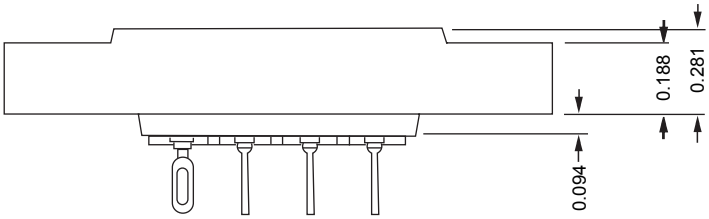

ELECTRICAL

Wire Size:

Solder Cup Type . . . . . One #20 AWG
Eyelet Type. . . . . .Two #20 AWG or Three #22 AWG

Current Rating. . . . . 10 Amperes

Withstanding Voltage:

Contact to Contact Sea Level . . . . . 2700 VRMS Minimum
Contact to Ground Sea Level . . . . . 5400 VRMS Minimum
Contact to Contact 70,000 Ft. . . . . .560 VRMS Minimum
Contact to Ground 70,000 Ft. . . . . 975 VRMS Minimum

MECHANICAL

Creepage Between Contacts . . . . . 0.16 Minimum
Air Space Between Contacts. . . . . 0.11 Minimum
Contacts to Accept 0.050 ± 0.001 DIA. Pins

Contacts:

Spring Temper Grade "A" Phosphor Bronze, or
Heat Treated Beryllium Copper
Gold Plated over Copper or Nickel Plate

Mounting Hardware:

Special Studs, Screws, Lockwashers, and Nuts

Insulation Material:

Choice of **MIL Approved** Thermosetting Insulations (See Page 45)

Temperature Ratings: -65°C to +125°C
Weight of Socket with Mountings: 0.39 oz.

CONTACT DATA	CHASSIS MOUNTING DATA				
	CHASSIS THICKNESS	X-DIMENSION	BELOW CHASSIS	BELOW CHASSIS	ABOVE CHASSIS
SOLDER CUP (3/16)	1/16	.20		HRCL-1	
	3/32	.17			
	1/8	.14		HRCL-41	
EYELET (1/4)	1/16	.20		HRCL-5	
	3/32	.17		HRCL-35	
	1/8	.14		HRCL-45	
STRAIGHT (X)	1/16	.12			HRCL-44
	3/32	.19			HRCL-64
	1/8				

RECOMMENDED CHASSIS CUT-OUT

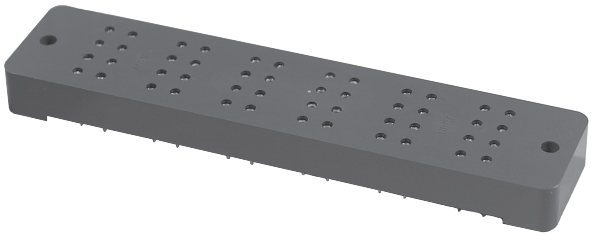

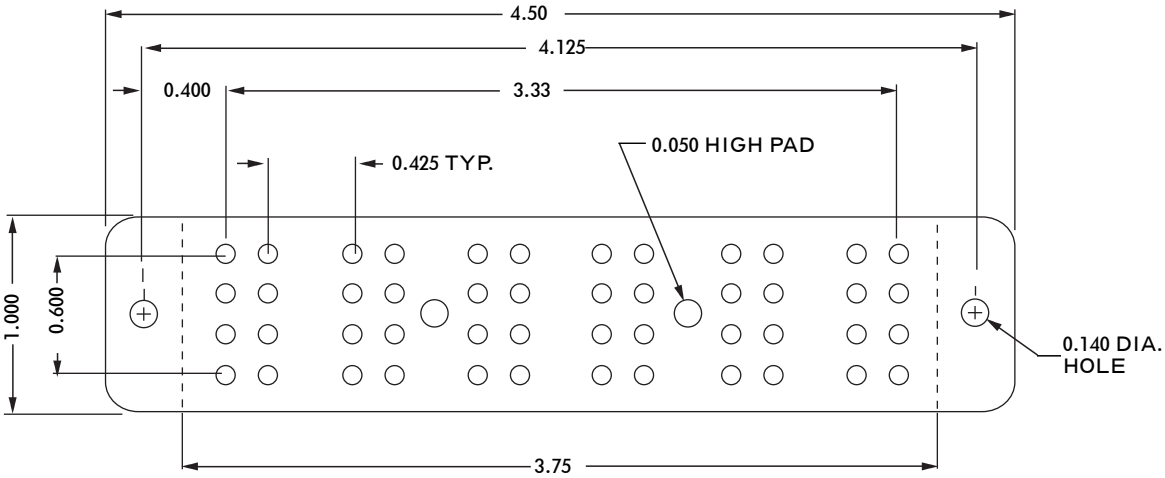

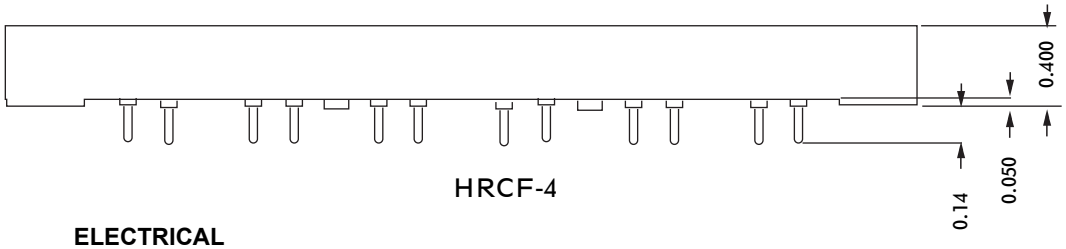

HRCF-4

ELECTRICAL

Current Rating. . . . . 10 Amperes
Withstanding Voltage:
Contact to Contact Sea Level . . . . . 2700 VRMS Minimum
Contact to Ground Sea Level . . . . . 2250 VRMS Minimum
Contact to Contact 70,000 Ft. . . . . 560 VRMS Minimum
Contact to Ground 70,000 Ft. . . . . .500 VRMS Minimum

MECHANICAL

Creepage Between Contacts . . . . . 0.11 Minimum
Air Space Between Contacts. . . . . .0.11 Minimum
Contacts to Accept 0.050 ± 0.001 DIA. Pins

Contacts:
Spring Temper Grade “A” Phosphor Bronze, or
Heat Treated Beryllium Copper
Gold Plated over Copper or Nickel Plate

Mounting Hardware:
Special Studs, Screws, Lockwashers, and Nuts

Insulation Material:
Choice of **MIL Approved** Thermosetting
Insulations (See Page 45)

Temperature Ratings: -65°C to +125°C
Weight of Socket with Mountings: 1.85 oz.

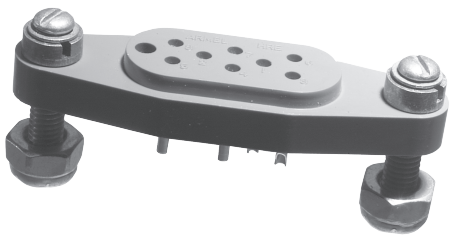

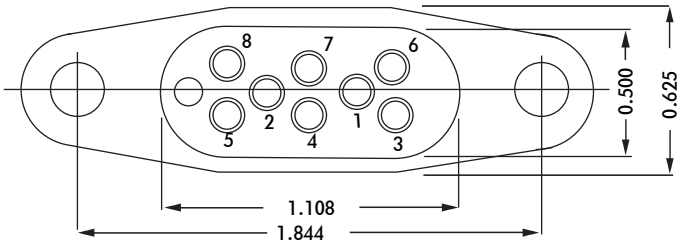

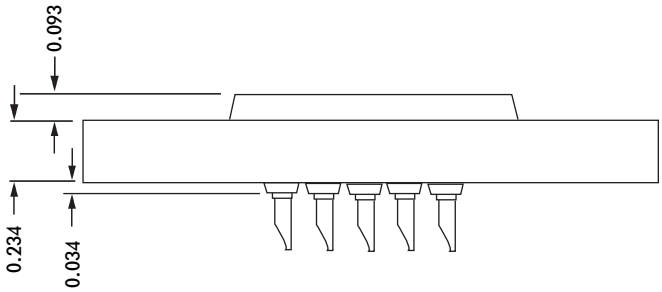

CONTACT DATA	CHASSIS MOUNTING DATA				
	CHASSIS THICKNESS	X-DIMENSION	BELOW CHASSIS	BELOW CHASSIS	ABOVE CHASSIS
SOLDER CUP	1/16	.12		HRE-1	HRE-2
	3/32	.09		HRE-31	HRE-32
	1/8	.06	HRE-41		HRE-42
EYELET	1/16	.12		HRE-5	HRE-6
	3/32	.09		HRE-35	HRE-36
	1/8	.06	HRE-45		HRE-46
TURRET	1/16	.12		HRE-3	HRE-4
	3/32	.09		HRE-33	HRE-34
	1/8	.06	HRE-43		HRE-44
TAPER PIN	1/16	.12		HRE-7	HRE-8
	3/32	.09		HRE-37	HRE-38
	1/8	.06	HRE-47		HRE-48

ELECTRICAL

Wire Size:

- Solder Cup Type . . . . . One #20 AWG
- Turret Type . . . . . Two #20 AWG or Three #22 AWG
- Eyelet Type . . . . . .Two #20 AWG or Three #22 AWG
- Taper Type . . . . . One AMP ?37? Taper Receptacle

Current Rating . . . . . 7.5 Amperes

Withstanding Voltage:

- Contact to Contact Sea Level . . . . .2700 VRMS Minimum
- Contact to Ground Sea Level . . . . . 6300 VRMS Minimum
- Contact to Contact 70,000 Ft. . . . . 560 VRMS Minimum
- Contact to Ground 70,000 Ft. . . . .1065 VRMS Minimum

MECHANICAL

Creepage Between Contacts . . . . . 0.16 Minimum

Air Space Between Contacts . . . . . 0.09 Minimum

Contacts to Accept 0.040 ± 0.001 DIA. Pins

Contacts:

Spring Temper Grade “A” Phosphor Bronze, or
Heat Treated Beryllium Copper
Gold Plated over Copper or Nickel Plate

Mounting Hardware:

Special Studs, Screws, Lockwashers, and Nuts

Insulation Material:

Choice of **MIL Approved** Thermosetting Insulations (See Page 45)

Temperature Ratings: -65°C to +125°C

Weight of Socket with Mountings: 0.69 oz.

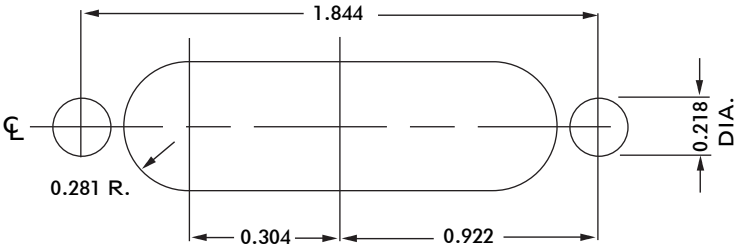

RECOMMENDED CHASSIS CUT-OUT

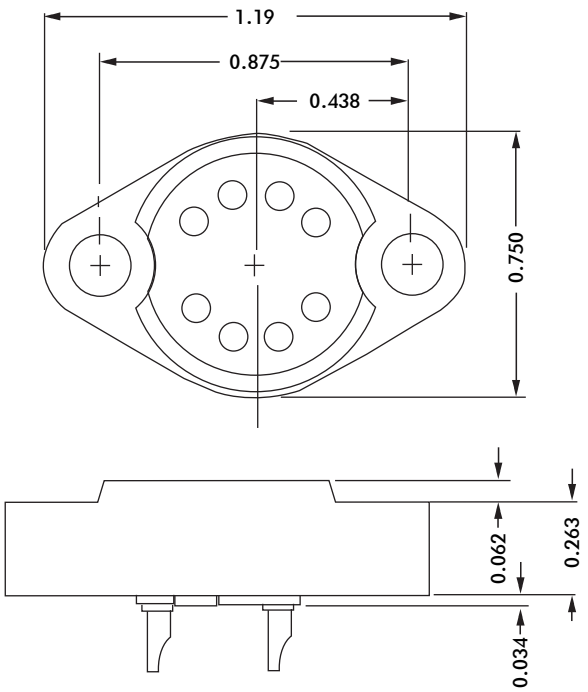

CONTACT DATA	CHASSIS MOUNTING DATA				
	CHASSIS THICKNESS	X-DIMENSION	BELOW CHASSIS	BELOW CHASSIS	ABOVE CHASSIS
SOLDER CUP (3/16)	1/16	.22	HRG-1		HRG-2
	3/32				
	1/8				
EYELET (1/4)	1/16	.22	HRG-5		HRG-6
	3/32				
	1/8				
STRAIGHT (7/32)	1/16	.22	HRG-13		HRG-14
	3/32				
	1/8				
TURRET (1/4)	1/16	.22	HRG-3		HRG-4
	3/32				
	1/8				

ELECTRICAL

Wire Size:

Solder Cup Type. . . . . One #20 AWG
Eyelet Type . . . . . Two #20 AWG
Three #22 AWG

Current Rating. . . . . 7.5 Amperes

Withstanding Voltage:

Contact to Contact Sea Level. . . . . 1500 VRMS Minimum
Contact to Ground Sea Level. . . . . 1500 VRMS Minimum
Contact to Contact 70,000 Ft. . . . . 375 VRMS Minimum
Contact to Ground 70,000 Ft. . . . . .375 VRMS Minimum

MECHANICAL

Creepage Between Contacts. . . . . 0.11 Minimum
Air Space Between Contacts. . . . . .0.05 Minimum
Contacts to Accept 0.040 ± 0.001 DIA. Pins

Contacts:

Spring Temper Grade "A" Phosphor Bronze, or
Heat Treated Beryllium Copper
Gold Plated over Copper or Nickel Plate

Mounting Hardware:

Special Studs, Screws, Lockwashers, and Nuts

Insulation Material:

Choice of **MIL Approved** Thermosetting
Insulations (See Page 45)

Temperature Ratings: -65°C to +125°C
Weight of Socket with Mountings: 0.45 oz.

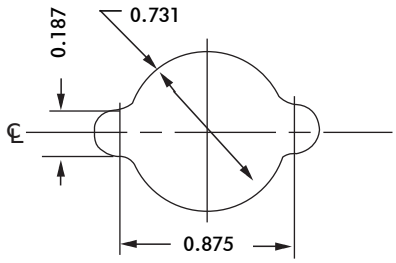

RECOMMENDED CHASSIS CUT-OUT

HRW SERIES

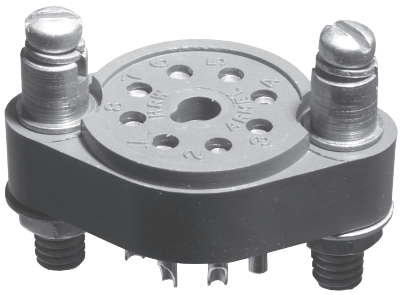

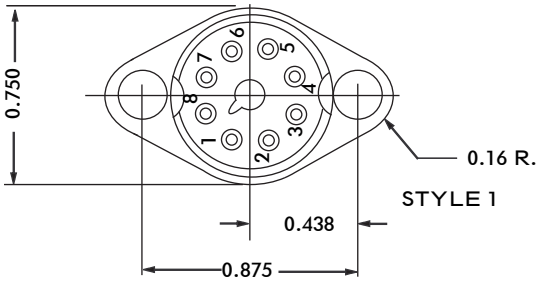

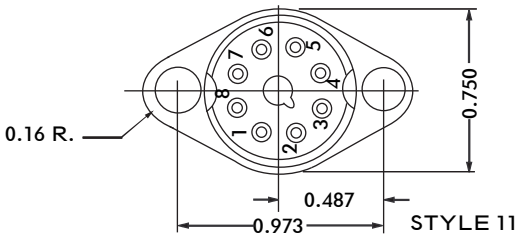

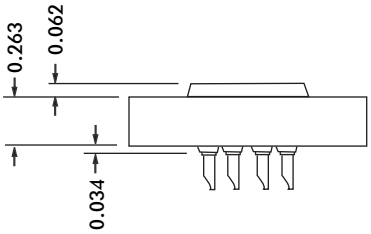

CONTACT DATA	CHASSIS MOUNTING DATA					
	CHASSIS THICKNESS	X-DIMENSION	STYLE	BELOW CHASSIS	BELOW CHASSIS	ABOVE CHASSIS
SOLDER CUP	1/16	.22	I	HRW-1		HRW-2
			II	HRW-5		HRW-6
	3/32	.19	I		HRW-31	
			II		HRW-35	
	1/8		I			
			II			
EYELET	1/16	.22	I	HRW-9		HRW-10
			II	HRW-11		HRW-12
	3/32	.19	I		HRW-39	
			II		HRW-311	
	1/8		I			
			II			
TURRET	1/16	.22	I	HRW-3		HRW-4
			II	HRW-7		HRW-8
	3/32	.19	I		HRW-33	
			II		HRW-37	
	1/8		I			
			II			
TAPER PIN	1/16	.22	I	HRW-13		HRW-14
			II	HRW-15		HRW-16
	3/32	.19	I		HRW-313	
			II		HRW-315	
	1/8		I			
			II			

ELECTRICAL

Wire Size:

- Solder Cup Type . . . . . .One #20 AWG
- Turret Type . . . . . .Two #20 AWG or Three #22 AWG
- Eyelet Type . . . . . .Two #20 AWG or Three #22 AWG
- Taper Type . . . . . One AMP ?37? Taper Receptacle

Current Rating . . . . . 7.5 Amperes

Withstanding Voltage:

- Contact to Contact Sea Level . . . . . 1800 VRMS Minimum
- Contact to Ground Sea Level . . . . . 1500 VRMS Minimum
- Contact to Contact 70,000 Ft. . . . . .450 VRMS Minimum
- Contact to Ground 70,000 Ft. . . . . 375 VRMS Minimum

MECHANICAL

Creepage Between Contacts . . . . . 0.14 Minimum

Air Space Between Contacts . . . . . .0.06 Minimum

Contacts to Accept 0.040 ± 0.001 DIA. Pins

Contacts:

Spring Temper Grade "A" Phosphor Bronze, or
Heat Treated Beryllium Copper
Gold Plated over Copper or Nickel Plate

Mounting Hardware:

Special Studs, Screws, Lockwashers, and Nuts

Insulation Material:

Choice of **MIL Approved** Thermosetting Insulations (See Page 45)

Temperature Ratings: -65°C to +125°C

Weight of Socket with Mountings: 0.44 oz.

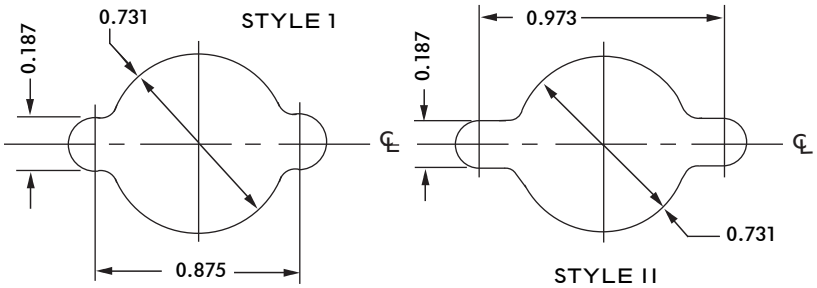

RECOMMENDED CHASSIS CUT-OUT

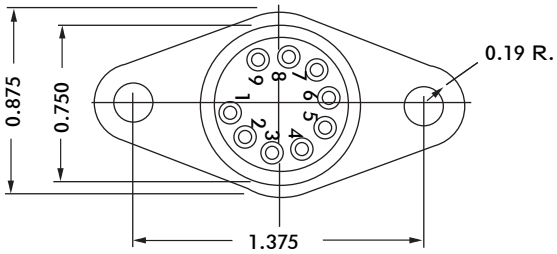

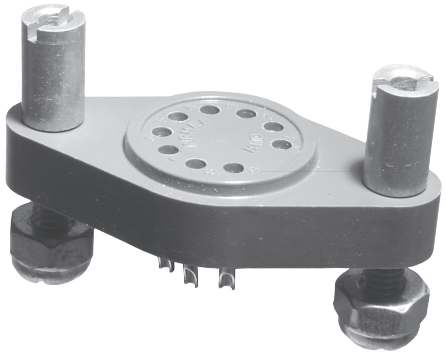

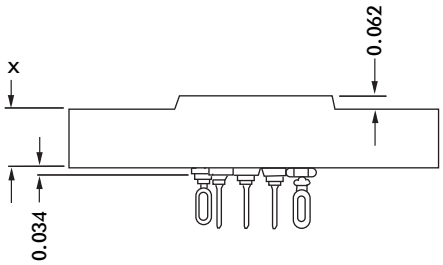

CONTACT DATA	CHASSIS MOUNTING DATA			
	CHASSIS THICKNESS	X-DIMENSION	BELOW CHASSIS (0.44, X)	ABOVE CHASSIS (0.50, 0.28)
SOLDER CUP (3/16)	1/16	.28	HRD-1	HRD-2
	3/32	.25	HRD-31	HRD-32
	1/8	.25	HRD-41	
EYELET (1/4)	1/16	.28	HRD-5	HRD-6
	3/32	.25	HRD-35	HRD-36
	1/8	.25	HRD-45	
TURRET (1/4)	1/16	.28	HRD-3	HRD-4
	3/32	.25	HRD-33	HRD-34
	1/8	.25	HRD-43	
TAPER PIN (1/4)	1/16	.28	HRD-7	HRD-8
	3/32	.25	HRD-37	HRD-38
	1/8	.25	HRD-47	

ELECTRICAL

Wire Size:
Solder Cup Type . . . . . One #20 AWG
Turret Type . . . . . Two #20 AWG or Three #22 AWG
Eyelet Type . . . . . Two #20 AWG or Three #22 AWG
Taper Type . . . . . One AMP ?37? Taper Receptacle
Current Rating . . . . . 7.5 Amperes
Withstanding Voltage:
Contact to Contact Sea Level . . . . . 1800 VRMS Minimum
Contact to Ground Sea Level . . . . . 3300 VRMS Minimum
Contact to Contact 70,000 Ft. . . . . .450 VRMS Minimum
Contact to Ground 70,000 Ft. . . . . 675 VRMS Minimum

MECHANICAL

Creepage Between Contacts . . . . . 0.12 Minimum
Air Space Between Contacts . . . . . 0.06 Minimum
Contacts to Accept 0.040 ± 0.001 DIA. Pins

Contacts:
Spring Temper Grade "A" Phosphor Bronze, or
Heat Treated Beryllium Copper
Gold Plated over Copper or Nickel Plate

Mounting Hardware:
Special Studs, Screws, Lockwashers, and Nuts

Insulation Material:
Choice of **MIL Approved** Thermosetting Insulations (See Page 45)

Temperature Ratings: -65°C to +125°C
Weight of Socket with Mountings: 0.70 oz.

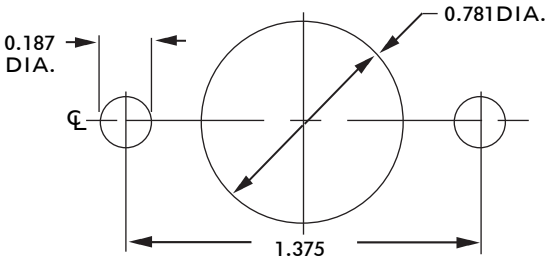

RECOMMENDED CHASSIS CUT-OUT

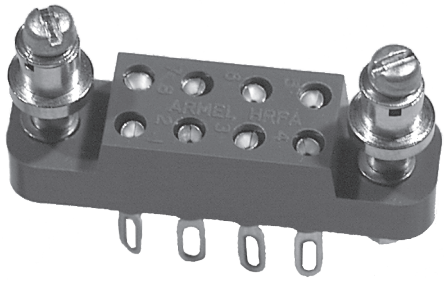

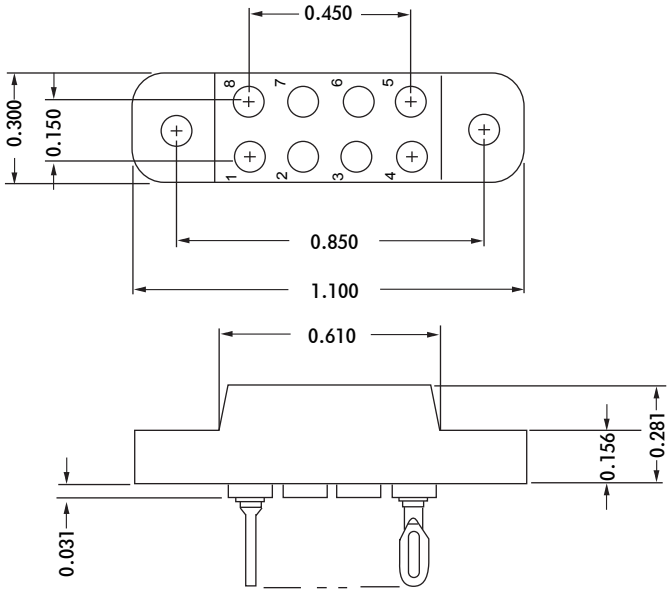

CONTACT DATA		CHASSIS MOUNTING DATA			
		CHASSIS THICKNESS	X-DIMENSION	BELOW CHASSIS	ABOVE CHASSIS
OPEN ENTRY	SOLDER CUP (3/16)	1/16	.17	HRFA - 1	HRFA - 2
		3/32	.14		
		1/8	.12		
	EYELET (1/4)	1/16	.17	HRFA - 5	HRFA - 6
		3/32	.14		
		1/8	.12		
	STRAIGHT (5/32)	1/16			HRFA - 4
		3/32			
		1/8			
	0.045 SQ. WIRE WRAP (5/8)	1/16	.17	HRFA - 23	
		3/32	.14		
		1/8	.12		
	0.025 SQ. WIRE WRAP (5/8)	1/16	.17	HRFA - 13	
		3/32	.14		
		1/8	.12		

ELECTRICAL:

Wire Size
- Solder Cup Type. . . . . .One #20 AWG
- Eyelet Type. . . . . .Two #20 AWG or Three #22 AWG

Current Rating. . . . . 3 Amperes

Withstanding Voltage:
- Contact to Contact Sea Level. . .1200 VRMS Minimum
- Contact to Ground Sea Level. . .3300 VRMS Minimum
- Contact to Contact 70,000 Ft.. . .500 VRMS Minimum
- Contact to Ground 70,000Ft.. . . .675 VRMS Minimum

MECHANICAL:

Creepage Between Contacts. . . . . 0.10 Minimum

Air Space Between Contacts. . . . . 0.06 Minimum

Contacts to Accept 0.020 +0.003 - 0.001 DIA. Pins

Contacts:
- Spring Temper Grade "A" Phosphor Bronze or Heat Treated Beryllium Copper
- Gold Plated over Copper or Nickel Plate

Mounting Hardware:
- Special Studs, Screws, Lockwashers, and Nuts

Insulation Material
- Choice of **MIL Approved** Thermosetting Insulations (See Page 45)

Temperature Ratings: -65°C to +125°C

Weight of Socket with Mountings: 0.25 oz.

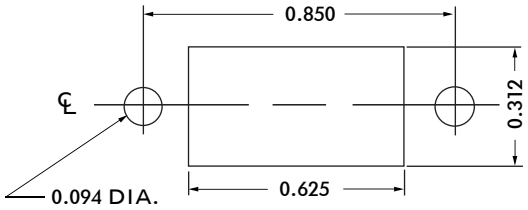

RECOMMENDED CHASSIS CUT-OUT

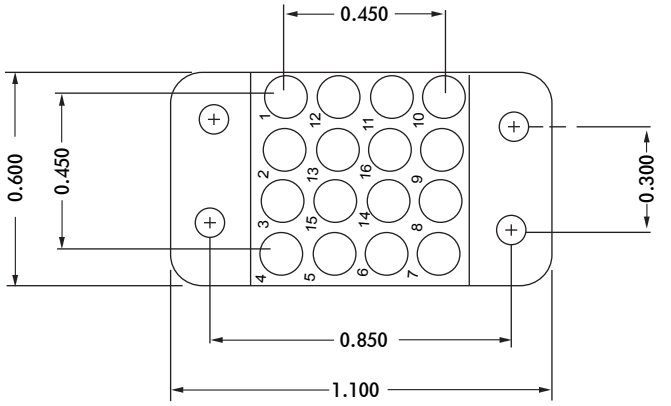

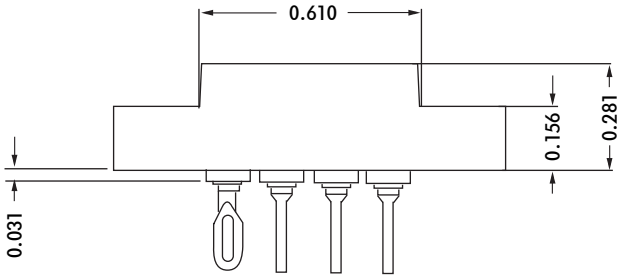

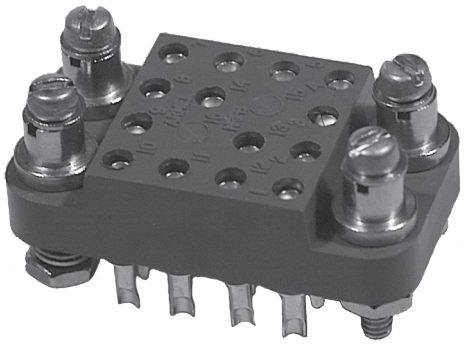

ELECTRICAL:

Wire Size
- Solder Cup Type. . . . . .One #20 AWG
- Eyelet Type. . . . . .Two #20 AWG or Three #22 AWG

Current Rating. . . . . 3 Amperes

Withstanding Voltage:
- Contact to Contact Sea Level. . .1200 VRMS Minimum
- Contact to Ground Sea Level. . .3300 VRMS Minimum
- Contact to Contact 70,000 Ft.. . .500 VRMS Minimum
- Contact to Ground 70,000 Ft.. . . .675 VRMS Minimum

MECHANICAL:

Creepage Between Contacts. . . . . 0.10 Minimum

Air Space Between Contacts. . . . . 0.06 Minimum

Contacts to Accept 0.020 $^{+0.003}_{-0.001}$ DIA. Pins

Contacts:
- Spring Temper Grade “A” Phosphor Bronze or Heat Treated Beryllium Copper
- Gold Plated over Copper or Nickel Plate

Mounting Hardware:
- Special Studs, Screws, Lockwashers, and Nuts

Insulation Material
- Choice of **MIL Approved** Thermosetting Insulations (See Page 45)

Temperature Ratings: -65°C to +125°C

Weight of Socket with Mountings: 0.40 oz.

CONTACT DATA		CHASSIS MOUNTING DATA				
		CHASSIS THICKNESS	X-DIMENSION	NO. OF CONTACTS	BELOW CHASSIS (X)	ABOVE CHASSIS (0.23)
OPEN ENTRY	SOLDER CUP (3/16)	1/16	.17	14	HRFB - 1	HRFB - 2
				16	HRFB - 601	HRFB - 602
		3/32	.14	14		
				16		
		1/8	.12	14		
				16		
	EYELET (1/4)	1/16	.17	14	HRFB - 5	HRFB - 6
				16	HRFB - 605	HRFB - 606
		3/32	.14	14		
				16		
		1/8	.12	14		
				16		
	STRAIGHT (5/32)	1/16		14		HRFB - 4
				16		HRFB - 614
		3/32		14		
				16		
		1/8		14		
				16		
	WIRE WRAP (0.045 SQ., 5/8)	1/16	.17	14	HRFB - 23	
				16	HRFB - 623	
		3/32	.14	14		
				16		
		1/8	.12	14		
				16		
	WIRE WRAP (0.025 SQ., 5/8)	1/16	.17	14	HRFB - 13	
				16	HRFB - 613	
		3/32	.14	14		
				16		
		1/8	.12	14		
				16		

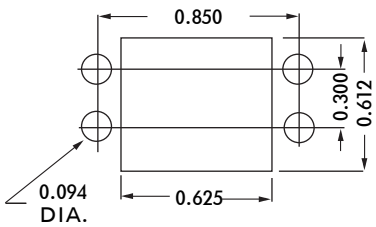

RECOMMENDED CHASSIS CUT-OUT

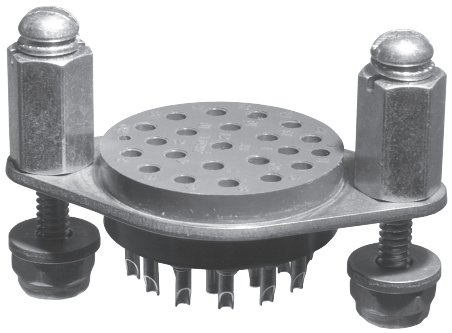

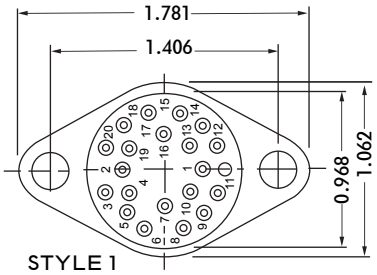

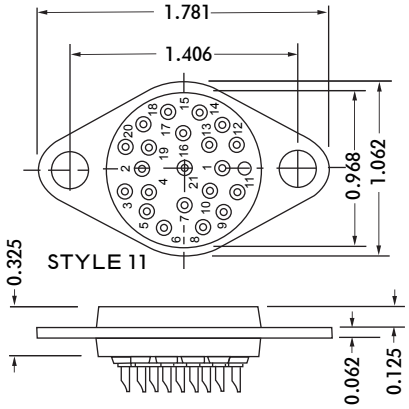

CONTACT DATA		CHASSIS MOUNTING DATA				
		CHASSIS THICKNESS	STYLE	NO. OF CONTACTS	BELOW CHASSIS (0.48, 0.06)	ABOVE CHASSIS (0.48)
OPEN ENTRY	SOLDER CUP (3/16)	1/16	II	21	HF-50	HF-50
			I	20	HF-59	HF-59
		1/16	II	15	HF-53	HF-53
			I	14	HF-62	HF-62
		1/16	II	9	HF-56	HF-56
			I	8	HF-65	HF-65
	TURRET (1/4)	1/16	II	21	HF-51	HF-51
			I	20	HF-60	HF-60
		1/16	II	15	HF-54	HF-54
			I	14	HF-63	HF-63
		1/16	II	9	HF-57	HF-57
			I	8	HF-66	HF-66
	EYELET (1/4)	1/16	II	21	HF-52	HF-52
			I	20	HF-61	HF-61
		1/16	II	15	HF-55	HF-55
			I	14	HF-64	HF-64
		1/16	II	9	HF-58	HF-58
			I	8	HF-67	HF-67
CLOSED ENTRY	SOLDER CUP (3/16)	1/16	II	21	HF-50K	HF-50K
			I	20	HF-59K	HF-59K
		1/16	II	15	HF-53K	HF-53K
			I	14	HF-62K	HF-62K
		1/16	II	9	HF-56K	HF-56K
			I	8	HF-65K	HF-65K
	EYELET (1/4)	1/16	II	21	HF-52K	HF-52K
			I	20	HF-61K	HF-61K
		1/16	II	15	HF-55K	HF-55K
			I	14	HF-64K	HF-64K
		1/16	II	9	HF-58K	HF-58K
			I	8	HF-67K	HF-67K

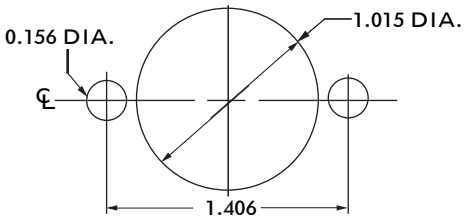

RECOMMENDED CHASSIS CUT-OUT

ELECTRICAL

Wire Size:
Solder Cup Type . . . . . One #20 AWG
Turret Type . . . . . Two #20 AWG or Three #22 AWG
Eyelet Type . . . . . Two #20 AWG or Three #22 AWG
Taper Type . . . . . One AMP ?37? Taper Receptacle
Current Rating . . . . . .7.5 Amperes

Withstanding Voltage:
- Contact to Contact Sea Level . . . . . 1800 VRMS Minimum
- Contact to Ground Sea Level . . . . . 3300 VRMS Minimum
- Contact to Contact 70,000 Ft. . . . . .450 VRMS Minimum
- Contact to Ground 70,000 Ft. . . . . 675 VRMS Minimum

MECHANICAL

Creepage Between Contacts . . . . . 0.12 Minimum
Air Space Between Contacts . . . . . 0.06 Minimum
Contacts to Accept 0.040 ± 0.001 DIA. Pins

Contacts:
- Spring Temper Grade “A” Phosphor Bronze, or
- Heat Treated Beryllium Copper
- Gold Plated over Copper or Nickel Plate

Mounting Hardware:
- Special Studs, Screws, Lockwashers, and Nuts

Insulation Material:
- Choice of **MIL Approved** Thermosetting Insulations (See Page 45)

Temperature Ratings: -65°C to +125°C
Weight of Socket with Mountings: 1.10 oz.

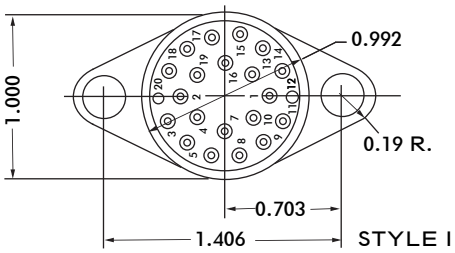

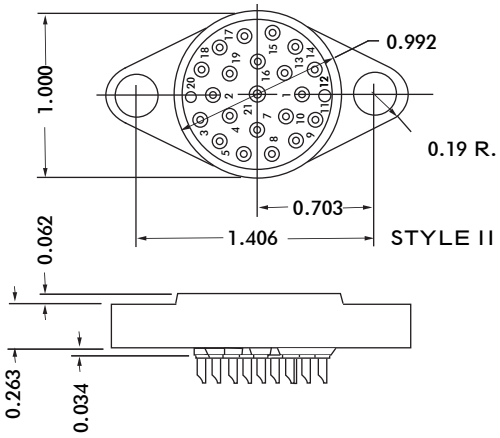

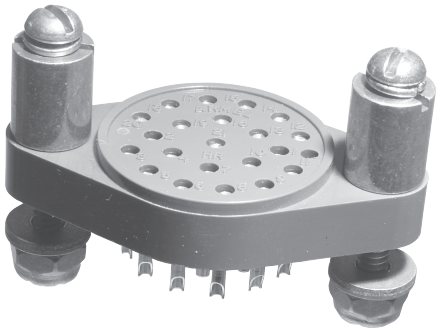

CONTACT DATA	CHASSIS MOUNTING DATA					
	CHASSIS THICKNESS	STYLE	NO. OF CONTACTS	BELOW CHASSIS (0.42)	BELOW CHASSIS (0.39)	ABOVE CHASSIS (0.42, 0.06)
SOLDER CUP (3/16)	1/16	II	21	HR-50		HR-50
		I	20	HR-59		HR-59
	3/32	II	21		HR-350	
		I	20		HR-359	
	1/16	II	15	HR-53		HR-53
		I	14	HR-62		HR-62
	1/16	II	9	HR-56		HR-56
		I	8	HR-65		HR-65
TURRET (1/4)	1/16	II	21	HR-51		HR-51
		I	20	HR-60		HR-60
	3/32	II	21		HR-351	
		I	20		HR-360	
	1/16	II	15	HR-54		HR-54
		I	14	HR-63		HR-63
	1/16	II	9	HR-57		HR-57
		I	8	HR-66		HR-66
EYELET (1/4)	1/16	II	21	HR-52		HR-52
		I	20	HR-61		HR-61
	3/32	II	21		HR-352	
		I	20		HR-361	
	1/16	II	15	HR-55		HR-55
		I	14	HR-64		HR-64
	1/16	II	9	HR-58		HR-58
		I	8	HR-67		HR-67
TAPER PIN (1/4)	1/16	II	21	HR-68		HR-68
		I	20	HR-71		HR-71
	3/32	II	21			
		I	20			
	1/16	II	15			
		I	14			
	1/16	II	9			
		I	8			

ELECTRICAL

Wire Size:

- Solder Cup Type . . . . . .One #20 AWG
- Turret Type . . . . . .Two #20 AWG or Three #22 AWG
- Eyelet Type . . . . . .Two #20 AWG or Three #22 AWG
- Taper Type . . . . . One AMP ?37? Taper Receptacle

Current Rating . . . . . 7.5 Amperes

Withstanding Voltage:

- Contact to Contact Sea Level . . . . . 1800 VRMS Minimum
- Contact to Ground Sea Level . . . . . .3300 VRMS Minimum
- Contact to Contact 70,000 Ft. . . . . 450 VRMS Minimum
- Contact to Ground 70,000 Ft. . . . . 675 VRMS Minimum

MECHANICAL

Creepage Between Contacts . . . . . 0.12 Minimum

Air Space Between Contacts . . . . . 0.06 Minimum

Contacts to Accept 0.040 ± 0.001 DIA. Pins

Contacts:

Spring Temper Grade "A" Phosphor Bronze, or
Heat Treated Beryllium Copper
Gold Plated over Copper or Nickel Plate

Mounting Hardware:

Special Studs, Screws, Lockwashers, and Nuts

Insulation Material:

Choice of **MIL Approved** Thermosetting Insulations (See Page 45)

Temperature Ratings: -65°C to +125°C

Weight of Socket with Mountings: 0.65 oz.

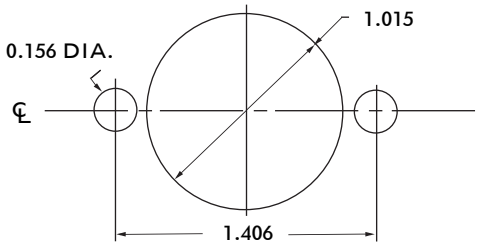

RECOMMENDED CHASSIS CUT-OUT

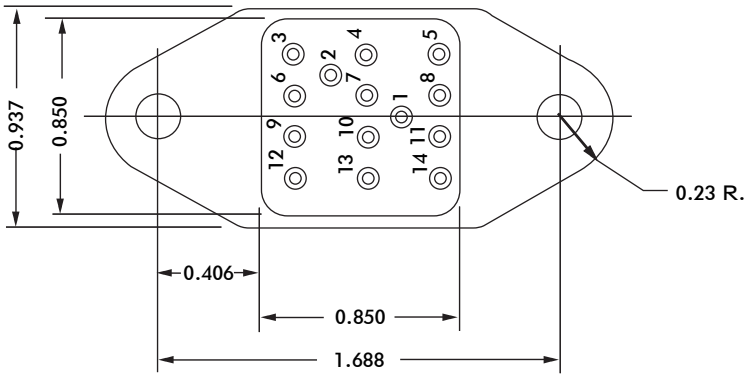

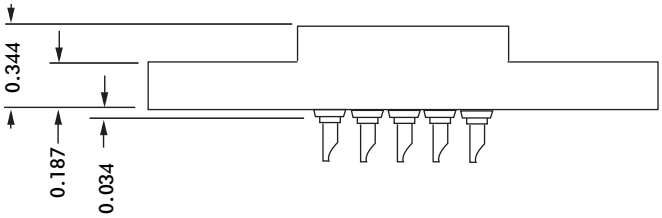

CONTACT DATA	CHASSIS MOUNTING DATA				
	CHASSIS THICKNESS	X-DIMENSION	BELOW CHASSIS	BELOW CHASSIS	ABOVE CHASSIS
SOLDER CUP	1/16	.12		HRB-1	HRB-2
	3/32	.09		HRB-31	HRB-32
	1/8	.06	HRB-41		HRB-42
EYELET	1/16	.12		HRB-5	HRB-6
	3/32	.09		HRB-35	HRB-36
	1/8	.06	HRB-45		HRB-46
TURRET	1/16	.12		HRB-3	HRB-4
	3/32	.09		HRB-33	HRB-34
	1/8	.06	HRB-43		HRB-44
TAPER PIN	1/16	.12		HRB-7	HRB-8
	3/32	.09		HRB-37	HRB-38
	1/8	.06	HRB-47		HRB-48

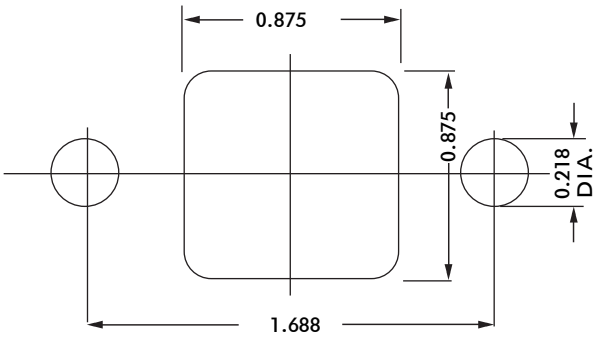

RECOMMENDED CHASSIS CUT-OUT

ELECTRICAL

Wire Size:
Solder Cup Type . . . . . One #20 AWG
Turret Type . . . . . Two #20 AWG or Three #22 AWG
Eyelet Type . . . . . Two #20 AWG or Three #22 AWG
Taper Type . . . . . One AMP ?37? Taper Receptacle
Current Rating . . . . . .7.5 Amperes
Withstanding Voltage:
Contact to Contact Sea Level . . . . . 2700 VRMS Minimum
Contact to Ground Sea Level . . . . . 5400 VRMS Minimum
Contact to Contact 70,000 Ft. . . . . .560 VRMS Minimum
Contact to Ground 70,000 Ft. . . . . 975 VRMS Minimum

MECHANICAL

Creepage Between Contacts . . . . . 0.16 Minimum
Air Space Between Contacts . . . . . 0.09 Minimum
Contacts to Accept 0.040 ± 0.001 DIA. Pins

Contacts:
Spring Temper Grade “A” Phosphor Bronze, or
Heat Treated Beryllium Copper
Gold Plated over Copper or Nickel Plate

Mounting Hardware:
Special Studs, Screws, Lockwashers, and Nuts

Insulation Material:
Choice of **MIL Approved** Thermosetting Insulations (See Page 45)

Temperature Ratings: -65°C to +125°C
Weight of Socket with Mountings: 0.96 oz.

FOR USE WITH MS27254-1 & -2 RELAYS FEATURING CRIMP, REMOVABLE CONTACTS AND POLARIZING KEY

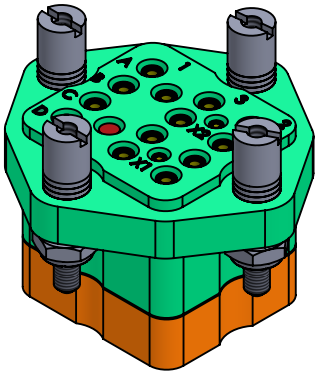

DIMENSIONS

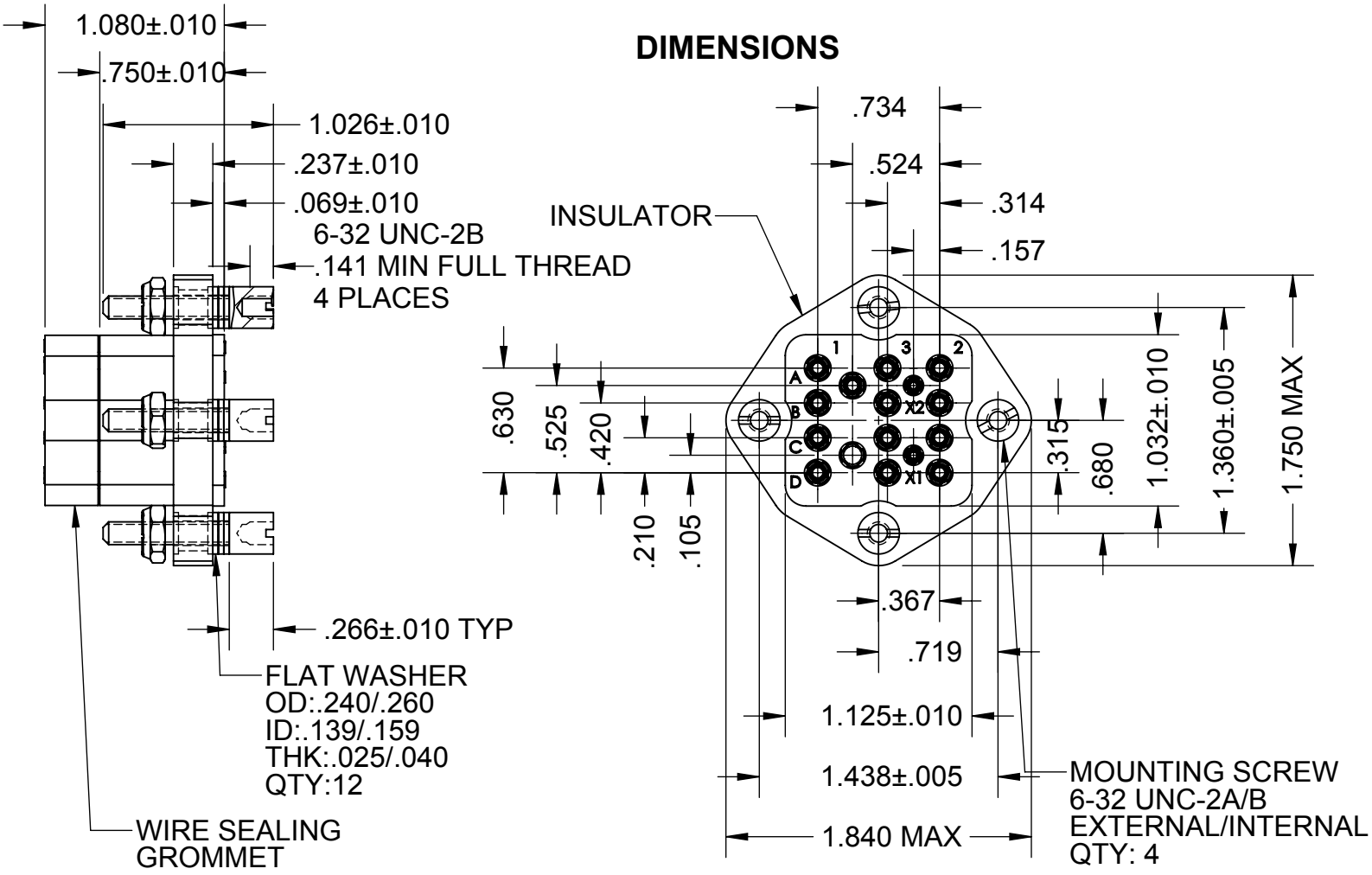

UNLESS OTHERWISE SPECIFIED, TOLERANCES FOR .XXX ARE ± .003

FOR MECHANICAL AND ELECTRICAL SPECIFICATIONS SEE PAGE 35

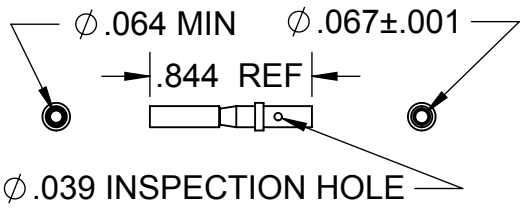

16 GAUGE CONTACT DETAIL

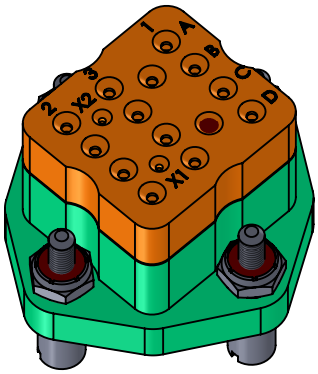

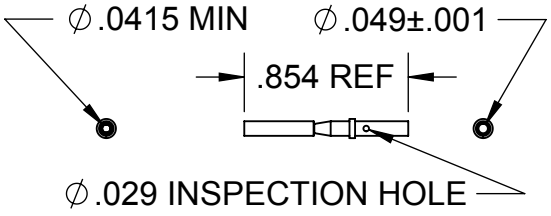

20 GAUGE CONTACT DETAIL

SPECIFICATIONS

ELECTRICAL

Current Rating.....10 Amperes
Dielectric Withstanding Voltage.....
Contact to Contact
Sea Level.....1500 VRMS @ 60 Hz

MECHANICAL

Contact Mating Pin Size.....14@∅.062±.001, 2@∅.040±.001
Wiring Terminal Accommodation.....14@16 AWG, 2@ 20 AWG
Contact Material & Finish.....Per Mil-C-39029/32-242 for ∅.040±.001 & Mil-C-39029/32-247 for ∅.062±.001 Mating Pin Size
Contact Plug Material & Finish.....Aluminum Alloy, 6061-T6511 Per AMS-QQ-A-200/8, Anodized Per MIL-A-8625, Type II, Class 2, Color: Red
16 & 20 Gauge Contact Retaining Clips Material and Finish.....Beryllium Copper Alloy 173, Heat Treated To Condition HT
Mounting Screw Insert Material and Finish.....Brass, C36000, H02 Per ASTM B-36, Nickel Flash, .0001 Inches Minimum Thickness
Lock Nuts Material & FInish.....Per NASM21083-C06
All Other Metal Hardware Material & Finish.....CRES Per ASTM A582, Type 303, Passivated Per AMS2700
Wire Sealing Grommet Material & Finish.....SILASTIC® FL 45-9001, Color: Orange
Insulation Material.....Short Glass Fiber Filled Diallyl Phthalate per ASTM D5948, Type SDG-F, Color: Green
Grommet/Insulator Adhesive.....Q4-2817 Fluorosilicone Sealant
Contact Crimping Tool.....M22520/1-01
Contact Installation Tool.....For M39029/32-242 Use M81969/17-03, For M39029/32-247 Use M81969/17-04.
Contact Removal Tool.....For M39029/32-242 Use M81969/19-07, For M39029/32-247 Use M81969/19-08.

RECOMMENDED CHASSIS CUT-OUT:

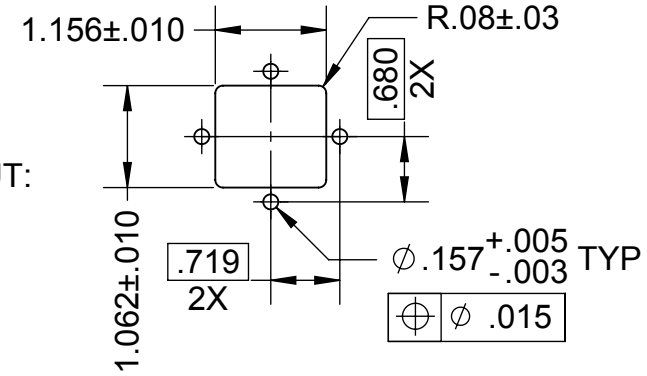

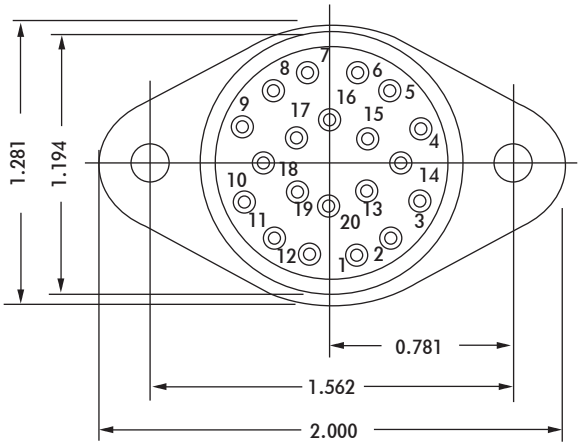

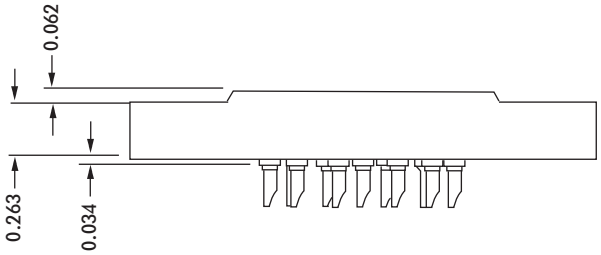

CONTACT DATA	CHASSIS MOUNTING DATA				
	CHASSIS THICKNESS	X-DIMENSION	BELOW CHASSIS	BELOW CHASSIS	ABOVE CHASSIS
SOLDER CUP	1/16	.12		HRS - 1	HRS - 2
	3/32	.09		HRS - 31	HRS - 32
	1/8	.06	HRS - 41		HRS - 42
EYELET	1/16	.12		HRS - 5	HRS - 6
	3/32	.09		HRS - 35	HRS - 36
	1/8	.06	HRS - 45		HRS - 46
TURRET	1/16	.12		HRS - 3	HRS - 4
	3/32	.09		HRS - 33	HRS - 34
	1/8	.06	HRS - 43		HRS - 44
TAPER PIN	1/16	.12		HRS - 7	HRS - 8
	3/32	.09		HRS - 37	HRS - 38
	1/8	.06	HRS - 47		HRS - 48
STRAIGHT	1/16				HRS - 10
	3/32				
	1/8				

ELECTRICAL

Wire Size:

Solder Cup Type . . . . . One #20 AWG

Turret Type . . . . . Two #20 AWG or Three #22 AWG

Eyelet Type . . . . . Two #20 AWG or Three #22 AWG

Taper Type . . . . . One AMP "37" Taper Receptacle

Current Rating . . . . . 7.5 Amperes

Withstanding Voltage:

Contact to Contact Sea Level . . . . . 2700 VRMS Minimum

Contact to Ground Sea Level . . . . . 2700 VRMS Minimum

Contact to Contact 70,000 Ft. . . . . .560 VRMS Minimum

Contact to Ground 70,000 Ft. . . . . 560 VRMS Minimum

MECHANICAL

Creepage Between Contacts . . . . . 0.16 Minimum

Air Space Between Contacts . . . . . 0.09 Minimum

Contacts to Accept 0.040 ± 0.001 DIA. Pins

Contacts:

Spring Temper Grade "A" Phosphor Bronze, or
Heat Treated Beryllium Copper
Gold Plated over Copper or Nickel Plate

Mounting Hardware:

Special Studs, Screws, Lockwashers, and Nuts

Insulation Material:

Choice of "MIL Approved" Thermosetting Insulations (See Page 45)

Temperature Ratings: -65°C to +125°C

Weight of Socket with Mountings: 0.96 oz.

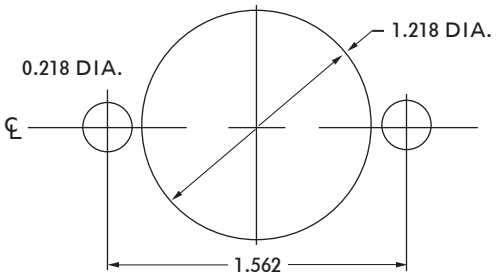

RECOMMENDED CHASSIS CUT-OUT

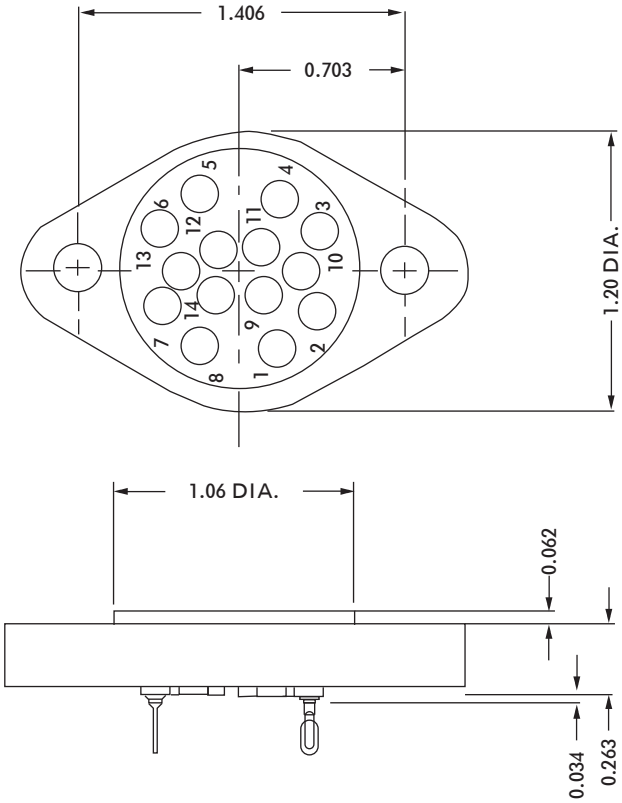

CLOSED ENTRY	CONTACT DATA	CHASSIS THICKNESS	X-DIMENSION	CHASSIS MOUNTING DATA: BELOW CHASSIS (X)	CHASSIS MOUNTING DATA: BELOW CHASSIS (X)	CHASSIS MOUNTING DATA: ABOVE CHASSIS (0.19)
	SOLDER CUP (3/16)	1/16	.12		HRSA - 1K	
		3/32	.09		HRSA - 31K	
		1/8	.06	HRSA - 41K		
	EYELET (1/4)	1/16	.12		HRSA - 5K	HRSA - 6K
		3/32	.09		HRSA - 35K	
		1/8	.06	HRSA - 45K		
	STRAIGHT (3/16)	1/16				HRSA - 10K
		3/32				
		1/8				

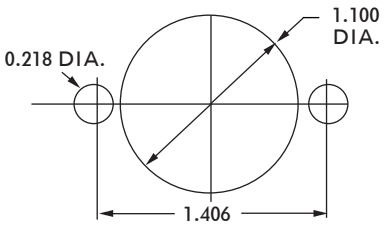

RECOMMENDED CHASSIS CUT-OUT

ELECTRICAL

Wire Size:
- Solder Cup Type . . . . . One #20 AWG
- Eyelet Type . . . . . Two #20 AWG or Three #22 AWG

Current Rating . . . . . 7.5 Amperes

Withstanding Voltage:
- Contact to Contact Sea Level . . . . . 2700 VRMS Minimum
- Contact to Ground Sea Level . . . . . 2700 VRMS Minimum
- Contact to Contact 70,000 Ft. . . . . .560 VRMS Minimum
- Contact to Ground 70,000 Ft. . . . . 560 VRMS Minimum

MECHANICAL

Creepage Between Contacts . . . . . 0.16 Minimum

Air Space Between Contacts . . . . . 0.10 Minimum

Contacts to Accept 0.040 ± 0.001 DIA. Pins

Contacts:
- Spring Temper Grade “A” Phosphor Bronze, or
- Heat Treated Beryllium Copper
- Gold Plated over Copper or Nickel Plate

Mounting Hardware:
- Special Studs, Screws, Lockwashers, and Nuts

Insulation Material:
- Choice of “MIL Approved” Thermosetting Insulations (See Page 45)

Temperature Ratings: -65°Cto +125°C

Weight of Socket with Mountings: 0.95 oz.

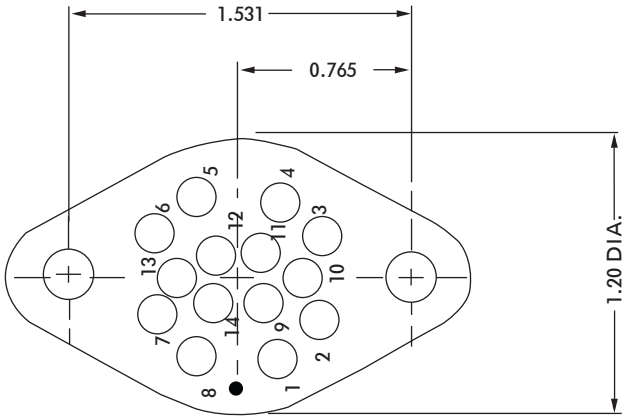

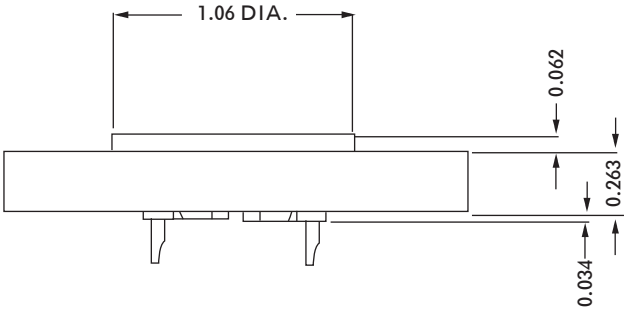

	CONTACT DATA	CHASSIS MOUNTING DATA				
		CHASSIS THICKNESS	X-DIMENSION	BELOW CHASSIS	BELOW CHASSIS	ABOVE CHASSIS
CLOSED ENTRY	SOLDER CUP (3/16)	1/16	.12		HRSB - 1K	
		3/32	.09		HRSB - 31K	
		1/8				
	EYELET (1/4)	1/16	.12		HRSB - 5K	HRSB - 6K
		3/32	.09		HRSB - 35K	
		1/8	.06	HRSB - 45K		
	STRAIGHT (7/32)	1/16	.12		HRSB - 4K	HRSB - 10K
		3/32				
		1/8				

ELECTRICAL

Wire Size:
- Solder Cup Type . . . . . One #20 AWG
- Eyelet Type . . . . . Two #20 AWG or Three #22 AWG

Current Rating . . . . . 7.5 Amperes

Withstanding Voltage:
- Contact to Contact Sea Level . . . . . 2700 VRMS Minimum
- Contact to Ground Sea Level . . . . . 2700 VRMS Minimum
- Contact to Contact 70,000 Ft. . . . . .560 VRMS Minimum
- Contact to Ground 70,000 Ft. . . . . 560 VRMS Minimum

MECHANICAL

Creepage Between Contacts . . . . . 0.16 Minimum

Air Space Between Contacts . . . . . 0.10 Minimum

Contacts to Accept 0.040 ± 0.001 DIA. Pins

Contacts:
- Spring Temper Grade “A” Phosphor Bronze, or
- Heat Treated Beryllium Copper
- Gold Plated over Copper or Nickel Plate

Mounting Hardware:
- Special Studs, Screws, Lockwashers, and Nuts

Insulation Material:
- Choice of “MIL Approved” Thermosetting Insulations (See Page 45)

Temperature Ratings: -65°C to +125°C

Weight of Socket with Mountings: 0.95 oz.

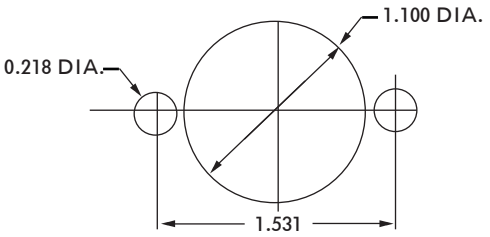

RECOMMENDED CHASSIS CUT-OUT

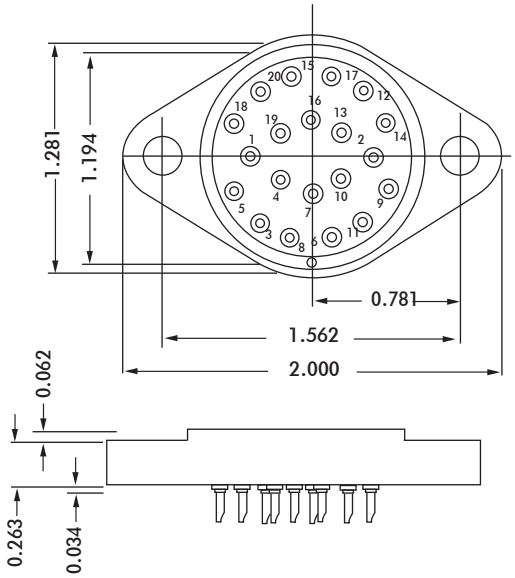

CONTACT DATA	CHASSIS MOUNTING DATA				
	CHASSIS THICKNESS	X-DIMENSION	BELOW CHASSIS	BELOW CHASSIS	ABOVE CHASSIS
SOLDER CUP	1/16	.12		HRSE - 1	HRSE - 2
	3/32	.09		HRSE - 31	HRSE - 32
	1/8	.06	HRSE - 41		HRSE - 42
EYELET	1/16	.12		HRSE - 5	HRSE - 6
	3/32	.09		HRSE - 35	HRSE - 36
	1/8	.06	HRSE - 45		HRSE - 46
TURRET	1/16	.12		HRSE - 3	HRSE - 4
	3/32	.09		HRSE - 33	HRSE - 34
	1/8	.06	HRSE - 43		HRSE - 44
TAPER PIN	1/16	.12		HRSE - 7	HRSE - 8
	3/32	.09		HRSE - 37	HRSE - 38
	1/8	.06	HRSE - 47		HRSE - 48

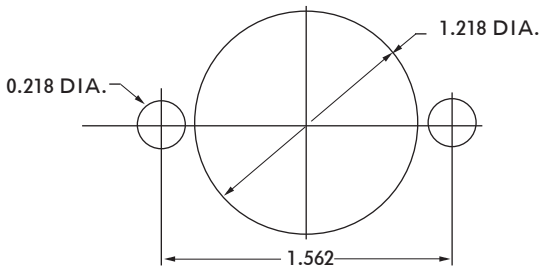

RECOMMENDED CHASSIS CUT-OUT

ELECTRICAL

Wire Size:

- Solder Cup Type . . . . . One #20 AWG
- Turret Type . . . . . Two #20 AWG or Three #22 AWG
- Eyelet Type . . . . . .Two #20 AWG or Three #22 AWG
- Taper Type . . . . . One AMP "37" Taper Receptacle

Current Rating . . . . . 7.5 Amperes

Withstanding Voltage:

- Contact to Contact Sea Level . . . . .2700 VRMS Minimum
- Contact to Ground Sea Level . . . . . 2700 VRMS Minimum
- Contact to Contact 70,000 Ft. . . . . 560 VRMS Minimum
- Contact to Ground 70,000 Ft. . . . . .560 VRMS Minimum

MECHANICAL

Creepage Between Contacts . . . . . 0.16 Minimum

Air Space Between Contacts . . . . . 0.09 Minimum

Contacts to Accept 0.040 ±0.001 DIA. Pins

Contacts:

Spring Temper Grade "A" Phosphor Bronze, or
Heat Treated Beryllium Copper
Gold Plated over Copper or Nickel Plate

Mounting Hardware:

Special Studs, Screws, Lockwashers, and Nuts

Insulation Material:

Choice of "MIL Approved" Thermosetting Insulations (See Page 45)

Temperature Ratings: -65°C to +125°C

Weight of Socket with Mountings: 0.96 oz.

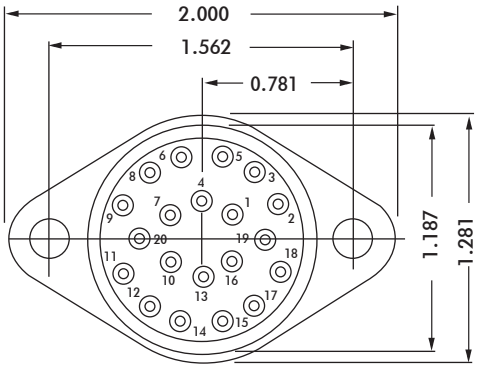

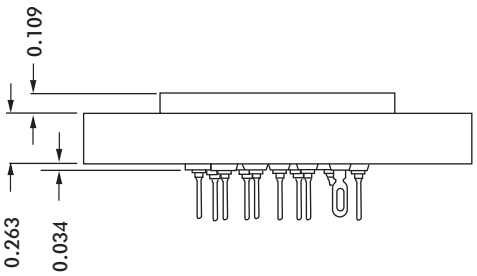

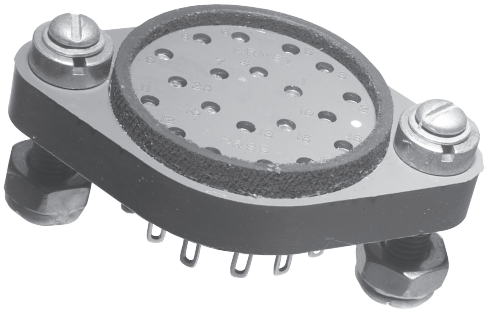

CONTACT DATA	CHASSIS MOUNTING DATA				
	CHASSIS THICKNESS	X-DIMENSION	BELOW CHASSIS	BELOW CHASSIS	ABOVE CHASSIS
SOLDER CUP	1/16	.12		HRSS - 1	HRSS - 2
	3/32	.09		HRSS - 31	HRSS - 32
	1/8	.06	HRSS - 41		HRSS - 42
EYELET	1/16	.12		HRSS - 5	HRSS - 6
	3/32	.09		HRSS - 35	HRSS - 36
	1/8	.06	HRSS - 45		HRSS - 46
TURRET	1/16	.12		HRSS - 3	HRSS - 4
	3/32	.09		HRSS - 33	HRSS - 34
	1/8	.06	HRSS - 43		HRSS - 44
TAPER PIN	1/16				
	3/32				
	1/8				
STRAIGHT	1/16				HRSS - 210
	3/32				
	1/8				HRSS - 2910

ELECTRICAL

Wire Size:

- Solder Cup Type . . . . . One #20 AWG
- Turret Type . . . . . Two #20 AWG or Three #22 AWG
- Eyelet Type . . . . . Two #20 AWG or Three #22 AWG
- Taper Type . . . . . One AMP "37" Taper Receptacle

Current Rating . . . . . 7.5 Amperes

Withstanding Voltage:

- Contact to Contact Sea Level . . . . .2700 VRMS Minimum
- Contact to Ground Sea Level . . . . . 2700 VRMS Minimum
- Contact to Contact 70,000 Ft. . . . . 560 VRMS Minimum
- Contact to Ground 70,000 Ft. . . . . .560 VRMS Minimum

MECHANICAL

Creepage Between Contacts . . . . . 0.16 Minimum

Air Space Between Contacts . . . . . 0.09 Minimum

Contacts to Accept 0.040 ± 0.001 DIA. Pins

Contacts:

Spring Temper Grade "A" Phosphor Bronze, or
Heat Treated Beryllium Copper
Gold Plated over Copper or Nickel Plate

Mounting Hardware:

Special Studs, Screws, Lockwashers, and Nuts

Insulation Material:

Choice of "MIL Approved" Thermosetting Insulations (See Page 45)

Temperature Ratings: -65°C to +125°C

Weight of Socket with Mountings: 0.96 oz.

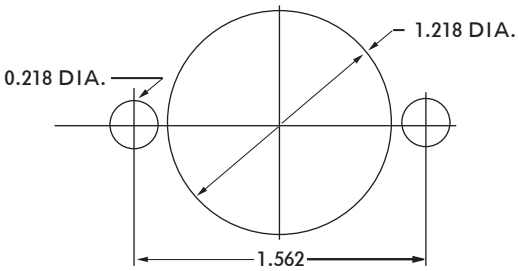

RECOMMENDED CHASSIS CUT-OUT

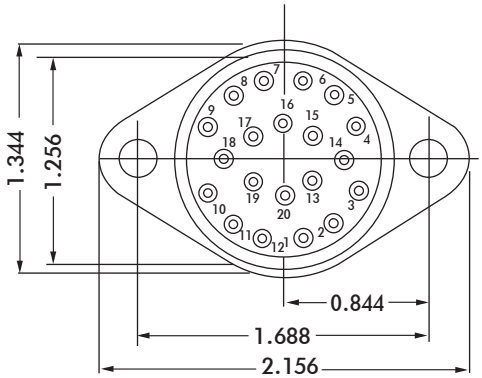

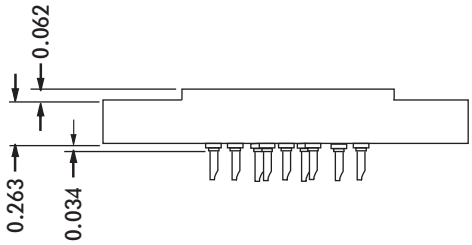

CONTACT DATA	CHASSIS MOUNTING DATA				
	CHASSIS THICKNESS	X-DIMENSION	BELOW CHASSIS	BELOW CHASSIS	ABOVE CHASSIS
SOLDER CUP	1/16	.12		HRL - 1	HRL - 2
	3/32	.09		HRL - 31	HRL - 32
	1/8	.06	HRL - 41		HRL - 42
EYELET	1/16	.12		HRL - 5	HRL - 6
	3/32	.09		HRL - 35	HRL - 36
	1/8	.06	HRL - 45		HRL - 46
TURRET	1/16	.12		HRL - 3	HRL - 4
	3/32	.09		HRL - 33	HRL - 34
	1/8	.06	HRL - 43		HRL - 44
TAPER PIN	1/16			HRL - 7	HRL - 8
	3/32			HRL - 37	HRL - 38
	1/8		HRL - 47		HRL - 48
STRAIGHT	1/16				HRL - 54
	3/32				
	1/8				

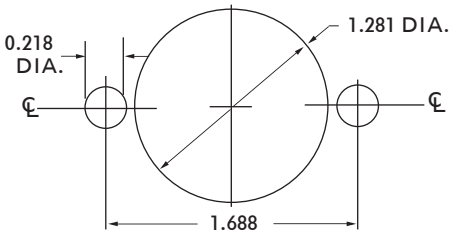

RECOMMENDED CHASSIS CUT-OUT

ELECTRICAL

Wire Size:

- Solder Cup Type . . . . . One #20 AWG
- Turret Type . . . . . Two #20 AWG or Three #22 AWG
- Eyelet Type . . . . . Two #20 AWG or Three #22 AWG
- Taper Type . . . . . One AMP "37" Taper Receptacle

Current Rating . . . . . 7.5 Amperes

Withstanding Voltage:

- Contact to Contact Sea Level . . . . .2700 VRMS Minimum
- Contact to Ground Sea Level . . . . . 3300 VRMS Minimum
- Contact to Contact 70,000 Ft. . . . . 560 VRMS Minimum
- Contact to Ground 70,000 Ft. . . . . 675 VRMS Minimum

MECHANICAL

Creepage Between Contacts . . . . . 0.16 Minimum

Air Space Between Contacts . . . . . 0.09 Minimum

Contacts to Accept 0.040 ± 0.001 DIA. Pins

Contacts:

Spring Temper Grade "A" Phosphor Bronze, or
Heat Treated Beryllium Copper
Gold Plated over Copper or Nickel Plate

Mounting Hardware:

Special Studs, Screws, Lockwashers, and Nuts

Insulation Material:

Choice of "MIL Approved" Thermosetting Insulations (See Page 45)

Temperature Ratings: -65°C to +125°C

Weight of Socket with Mountings: 0.96 oz.

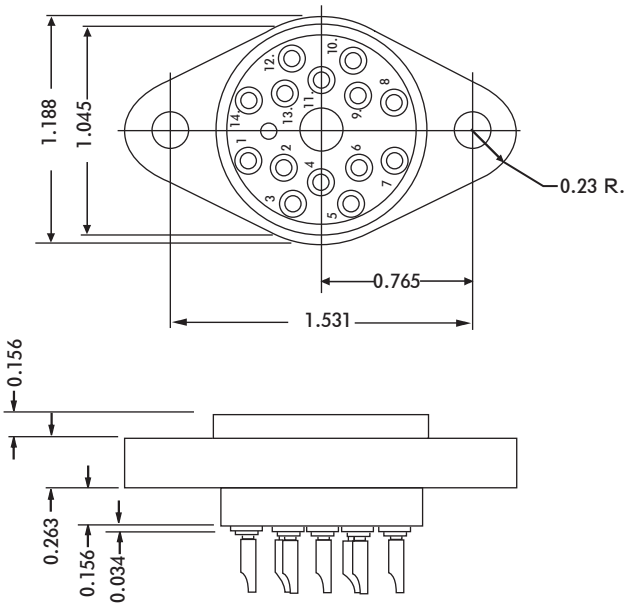

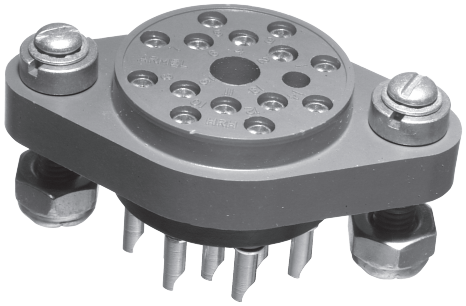

CONTACT DATA	CHASSIS MOUNTING DATA				
	CHASSIS THICKNESS	X-DIMENSION	BELOW CHASSIS	BELOW CHASSIS	ABOVE CHASSIS
SOLDER CUP (5/16)	1/16	.12		HRH - 1	HRH - 2
	3/32	.09		HRH -31	HRH - 32
	1/8	.06		HRH - 41	HRH - 42
TURRET (11/32)	1/16	.12		HRH - 3	HRH - 4
	3/32	.09		HRH - 33	HRH - 34
	1/8	.06		HRH - 43	HRH - 44
WIRE WRAP (0.045 SQ., 0.76)	1/16	.12		HRH - 9	
	3/32				
	1/8				

ELECTRICAL

Wire Size:

Solder Cup Type . . . . . .One #16 AWG or Two #20 AWG

Turret Type . . . . . Two #20 AWG or Three #20 AWG

Current Rating . . . . . 13 Amperes

Withstanding Voltage:

Contact to Contact Sea Level . . . . . 1500 VRMS Minimum

Contact to Ground Sea Level . . . . . .2700 VRMS Minimum

Contact to Contact 70,000 Ft. . . . . .375 VRMS Minimum

Contact to Ground 70,000 Ft. . . . . 560 VRMS Minimum

MECHANICAL

Creepage Between Contacts . . . . . 0.11 Minimum

Air Space Between Contacts . . . . . 0.05 Minimum

Contacts to Accept 0.062 ± 0.001 DIA. Pins

Contacts:

Spring Temper Grade “A” Phosphor Bronze, or
Heat Treated Beryllium Copper
Gold Plated over Copper or Nickel Plate

Mounting Hardware:

Special Studs, Screws, Lockwashers, and Nuts

Insulation Material:

Choice of “MIL Approved” Thermosetting Insulations (See Page 45)

Temperature Ratings: -65°C to +125°C

Weight of Socket with Mountings: 1.39 oz.

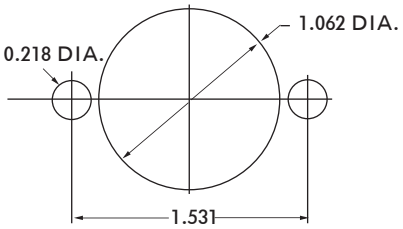

RECOMMENDED CHASSIS CUT-OUT

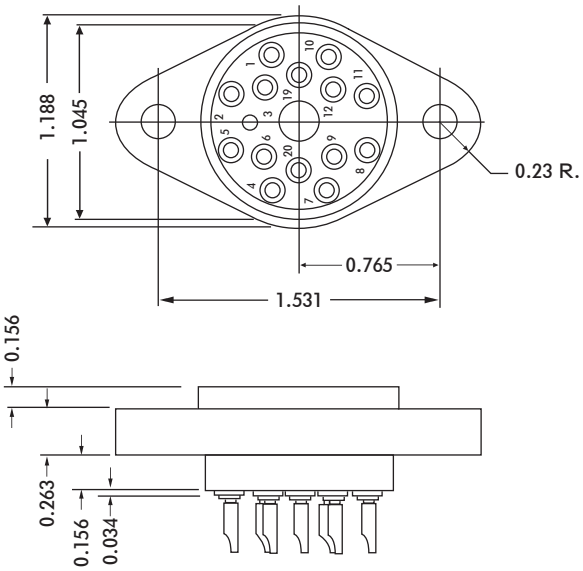

CONTACT DATA	CHASSIS MOUNTING DATA				
	CHASSIS THICKNESS	X-DIMENSION	BELOW CHASSIS	BELOW CHASSIS	ABOVE CHASSIS
SOLDER CUP (5/16)	1/16	.09		HRHA - 1	HRHA - 2
	3/32	.06	HRHA - 31		HRHA - 32
	1/8				HRHA - 42
TURRET (11/32)	1/16	.09			
	3/32	.06			
	1/8				

ELECTRICAL

Wire Size:

Solder Cup Type . . . . . One #16 AWG

Turret Type . . . . . Two #16 AWG or Three #20 AWG

Current Rating . . . . . 13 Amperes

Withstanding Voltage:

Contact to Contact Sea Level . . . . . 1500 VRMS Minimum

Contact to Ground Sea Level . . . . . .2700 VRMS Minimum

Contact to Contact 70,000 Ft. . . . . 375 VRMS Minimum

Contact to Ground 70,000 Ft. . . . . 560 VRMS Minimum

MECHANICAL

Creepage Between Contacts . . . . . 0.11 Minimum

Air Space Between Contacts . . . . . 0.05 Minimum

Contacts to Accept 0.062 ± 0.001 DIA. Pins

Contacts:

Spring Temper Grade "A" Phosphor Bronze, or
Heat Treated Beryllium Copper
Gold Plated over Copper or Nickel Plate

Mounting Hardware:

Special Studs, Screws, Lockwashers, and Nuts

Insulation Material:

Choice of "MIL Approved" Thermosetting Insulations (See Page 45)

Temperature Ratings: -65°C to +125°C

Weight of Socket with Mountings: 1.39 oz.

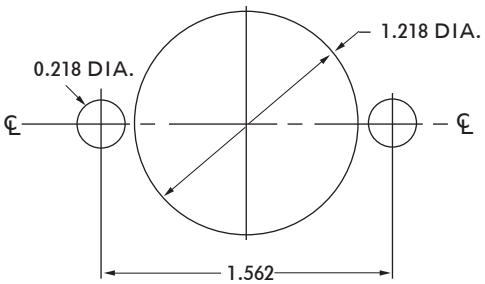

RECOMMENDED CHASSIS CUT-OUT

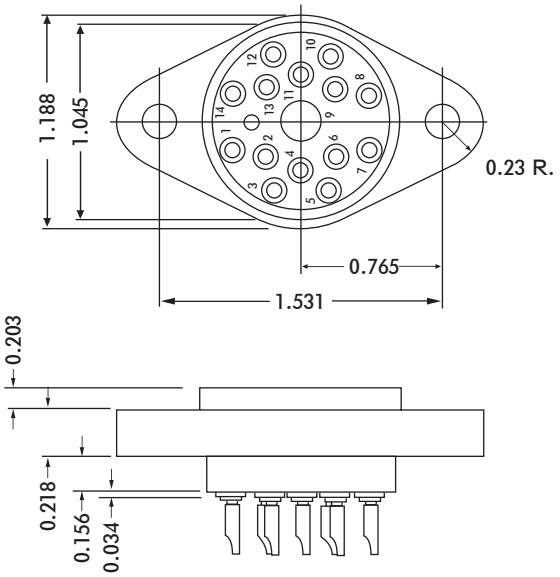

CONTACT DATA	CHASSIS MOUNTING DATA				
	CHASSIS THICKNESS	X-DIMENSION	BELOW CHASSIS	BELOW CHASSIS	ABOVE CHASSIS
SOLDER CUP (5/16)	1/16	.12		HRHF - 21	HRHF - 22
	3/32	.09	HRHF - 31		HRHF - 32
	1/8	.06	HRHF - 41		HRHF - 42
TURRET (11/32)	1/16	.12		HRHF - 23	HRHF - 24
	3/32	.09	HRHF - 33		HRHF - 34
	1/8	.06	HRHF - 43		HRHF - 44

ELECTRICAL

Wire Size:

Solder Cup Type . . . . . .One #16 AWG or Two #20 AWG

Turret Type . . . . . Two #16 AWG or Three #20 AWG

Current Rating . . . . . 13 Amperes

Withstanding Voltage:

Contact to Contact Sea Level . . . . . 1500 VRMS Minimum

Contact to Ground Sea Level . . . . . 2700 VRMS Minimum

Contact to Contact 70,000 Ft. . . . . .375 VRMS Minimum

Contact to Ground 70,000 Ft. . . . . 560 VRMS Minimum

MECHANICAL

Creepage Between Contacts . . . . . 0.11 Minimum

Air Space Between Contacts . . . . . 0.05 Minimum

Contacts to Accept 0.062 ± 0.001 DIA. Pins

Contacts:

Spring Temper Grade “A” Phosphor Bronze, or
Heat Treated Beryllium Copper
Gold Plated over Copper or Nickel Plate

Mounting Hardware:

Special Studs, Screws, Lockwashers, and Nuts

Insulation Material:

Choice of “MIL Approved” Thermosetting Insulations (See Page 45)

Temperature Ratings: -65°C to +125°C

Weight of Socket with Mountings: 1.39 oz.

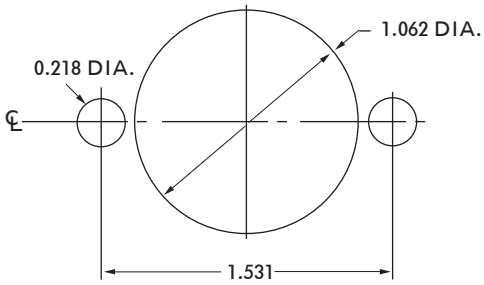

RECOMMENDED CHASSIS CUT-OUT

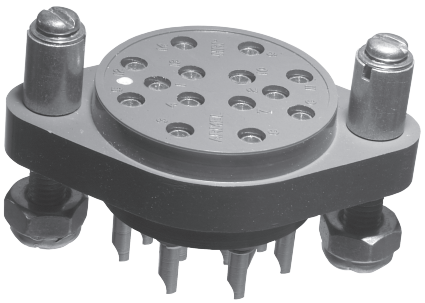

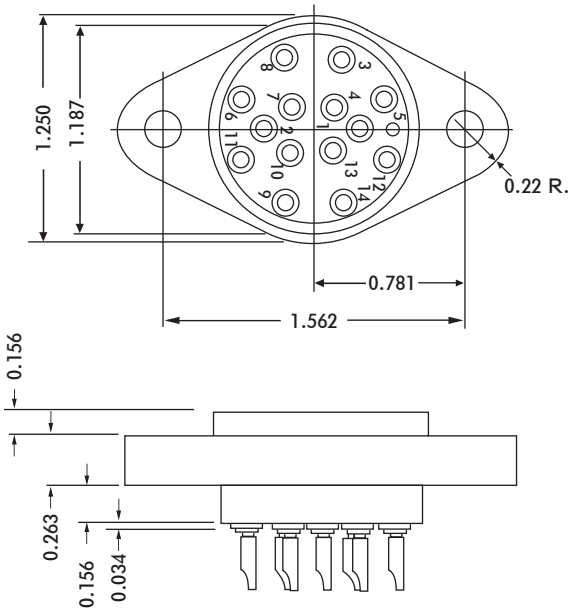

CONTACT DATA	CHASSIS MOUNTING DATA				
	CHASSIS THICKNESS	X-DIMENSION	BELOW CHASSIS	BELOW CHASSIS	ABOVE CHASSIS
SOLDER CUP (5/16)	1/16	.44		HRP - 1	HRP - 2
	3/32	.41		HRP -31	HRP - 32
	1/8	.38		HRP - 41	HRP - 42
TURRET (11/32)	1/16	.44		HRP - 3	HRP - 4
	3/32	.41		HRP - 33	HRP - 34
	1/8	.38		HRP - 43	HRP - 44
WIRE WRAP (0.045 SQ., 0.76)	1/16	.44		HRP - 19	
	3/32	.41		HRP - 39	
	1/8	.38		HRP - 49	

ELECTRICAL

Wire Size:
- Solder Cup Type . . . . . .One #16 AWG or Two #20 AWG
- Turret Type . . . . . .Two #16 AWG or Three #20 AWG

Current Rating . . . . . 13 Amperes

Withstanding Voltage:
- Contact to Contact Sea Level . . . . . 1800 VRMS Minimum
- Contact to Ground Sea Level . . . . . 2700 VRMS Minimum
- Contact to Contact 70,000 Ft. . . . . .450 VRMS Minimum
- Contact to Ground 70,000 Ft. . . . . 560 VRMS Minimum

MECHANICAL

Creepage Between Contacts . . . . . 0.12 Minimum

Air Space Between Contacts . . . . . 0.06 Minimum

Contacts to Accept 0.062 ± 0.001 DIA. Pins

Contacts:
- Spring Temper Grade “A” Phosphor Bronze, or
- Heat Treated Beryllium Copper
- Gold Plated over Copper or Nickel Plate

Mounting Hardware:
- Special Studs, Screws, Lockwashers, and Nuts

Insulation Material:
- Choice of “MIL Approved” Thermosetting Insulations (See Page 45)

Temperature Ratings: -65°C to +125°C

Weight of Socket with Mountings: 1.54 oz.

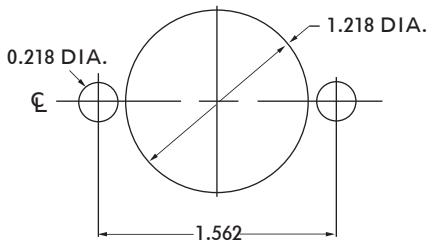

RECOMMENDED CHASSIS CUT-OUT

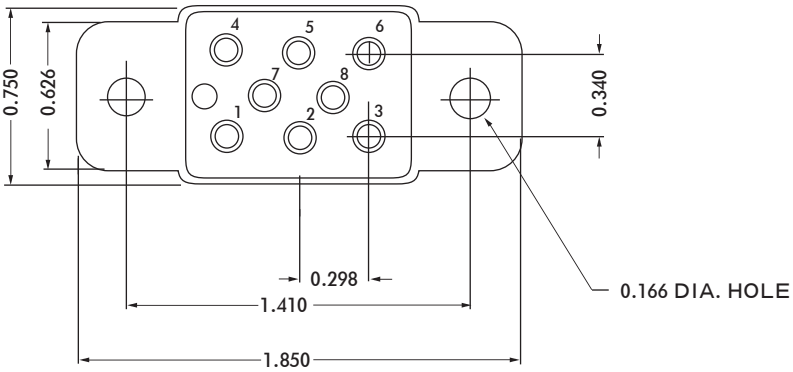

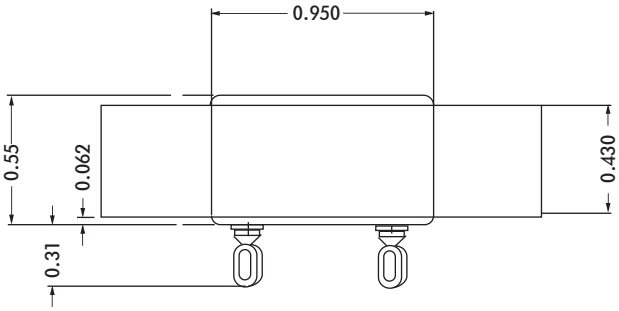

HRY-285

ELECTRICAL

Wire Size:

Solder Cup Type . . . . . N.A.

Eyelet Type . . . . . .One #16 AWG or Two #20 AWG

Current Rating . . . . . 10 Amperes

MECHANICAL

Creepage Between Contacts . . . . . 0.07 Minimum

Air Space Between Contacts . . . . . 0.07 Minimum

Contacts to Accept 0.060 ± 0.005 DIA. Pins

Contacts:

Heat Treated Beryllium Copper
Gold Plated over Copper or Nickel Plate

Mounting Hardware:

Special Studs, Screws, Lockwashers, and Nuts

Insulation Material:

Choice of “MIL Approved” Thermosetting Insulations (See Page 45)

Temperature Ratings: -65°C to +125°C

Weight of Socket with Mountings: 0.85 oz.

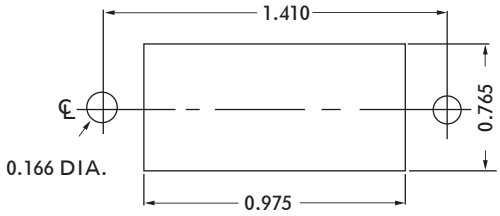

RECOMMENDED CHASSIS CUT-OUT

ORDERING INSTRUCTIONS

PART NUMBER
HRCC - 41 K J F V2

- SUFFIX 4 CONTACT PLATING
- SUFFIX 3 SUPPLEMENTARY CONTACT TERMINAL FINISH
- SUFFIX 2 INSULATION MATERIAL
- SUFFIX 1 CONTACT STYLE
- CHASSIS MOUNTING AND CONTACT TERMINATION (SEE DETAIL DATA SHEETS)
- SERIES

MATERIAL CERTIFICATIONS

SUFFIX 1

NONE	OPEN-ENTRY CONTACTS
K	CLOSED-ENTRY CONTACTS

SUFFIX 2

J	DIALLYL PHTHALATE, GLASS-FIBER FILLED PER MIL-M-14, TYPE GDI 30F
L	DIALLYL PHTHALATE, GLASS-FIBER FILLED PER MIL-M-14, TYPE SDG-F
L2	DIALLYL PHTHALATE, GLASS-FIBER FILLED PER MIL-M-14, TYPE SDG-F COLOR BLACK
H	DIALLYL PHTHALATE, ORLON-FILLED PER MIL-M-14, TYPE SDI-5

SUFFIX 3

NONE	NO SUPPLEMENTARY CONTACT TERMINAL FINISH
F	SOLDER (60-40) WITH WATER SOLUBLE ROSIN FLUX (SOLDER CUP-PREFILLED) (EYELET, STRAIGHT PIN, AND TURRET-DIPPED)

SUFFIX 4

V2	GOLD PLATE (0.00005) PER MIL-G-45204, TYPE II, CLASS 1 OVER COPPER PLATE
T3	GOLD PLATE (0.00005) PER MIL-G-45204, TYPE II, CLASS 1 OVER NICKEL PLATE (0.0001) PER QQ-N-290, TYPE VII, CLASS 1 (LOW STRESS NICKEL) OVER COPPER PLATE PER MIL-C-14550, CLASS 4
T6	GOLD PLATE PER MIL-G-45204, TYPE II, CLASS 1, GRADE C OVER GOLD PLATE PER MIL-G-45204, TYPE I, CLASS 00, GRADE A OVER NICKEL PLATE PER QQ-N-290 30-50 MICROINCHES (LOW STRESS NICKEL) OVER COPPER PLATE PER MIL-C-14550 CLASS 4

OTHER PLATINGS AVAILABLE UPON REQUEST

GENERAL

1. MEET OR EXCEED APPLICABLE REQUIREMENTS OF MIL-S-12883
2. UTILIZE PRECISION MACHINED CONTACTS OF SPRING TEMPER PHOSPHOR BRONZE AND/OR HEAT-TREATED BERYLLIUM COPPER. **AN ARMEL FIRST IS THE USE OF CONTACTS WITH EYELET-TYPE WIRE CONNECTION.**
3. ALL CONTACTS FREE FLOATING AND SECURELY CONTAINED.
4. CLOSED-ENTRY CONTACTS MEET PROBE DAMAGE TEST OF MIL-C-5015
5. CONTACTS GOLD PLATED FOR LOW CONTACT RESISTANCE
6. ADAPTABLE FOR AUTOMATION
7. REDUCES POSSIBILITY OF MOISTURE CONTAMINATION

MATERIAL AND FINISH SPECIFICATIONS

STAINLESS STEEL	QQ-S-763/766 TYPE 303 (NON-MAGNETIC)
COLD ROLL STEEL	QQ-S-640, COMPOSITION CR
BRASS	QQ-B-626
PHOSPHOR BRONZE	QQ-B-750
BERYLLIUM COPPER	QQ-C-533
CADMIUM PLATE	QQ-P-416, TYPE II, CLASS 2
NICKEL PLATE	QQ-N-290, TYPE VII, CLASS 2
PASSIVATE	QQ-P-35 / AMS 2700
HOT TIN DIP	MIL-T-10727, TYPE II

ARMEL ELECTRONICS, INC.
1601 75TH STREET NORTH BERGEN, NJ 07047
FAX 201-869-4304
WEBSITE WWW.ARMELELECTRONICS.COM E-MAIL INFO@ARMELELECTRONICS.COM

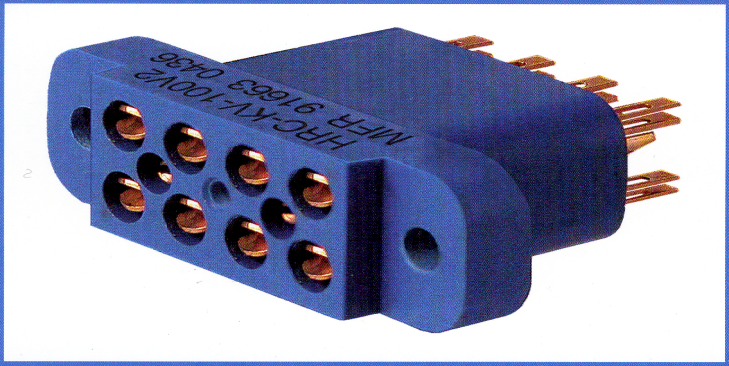

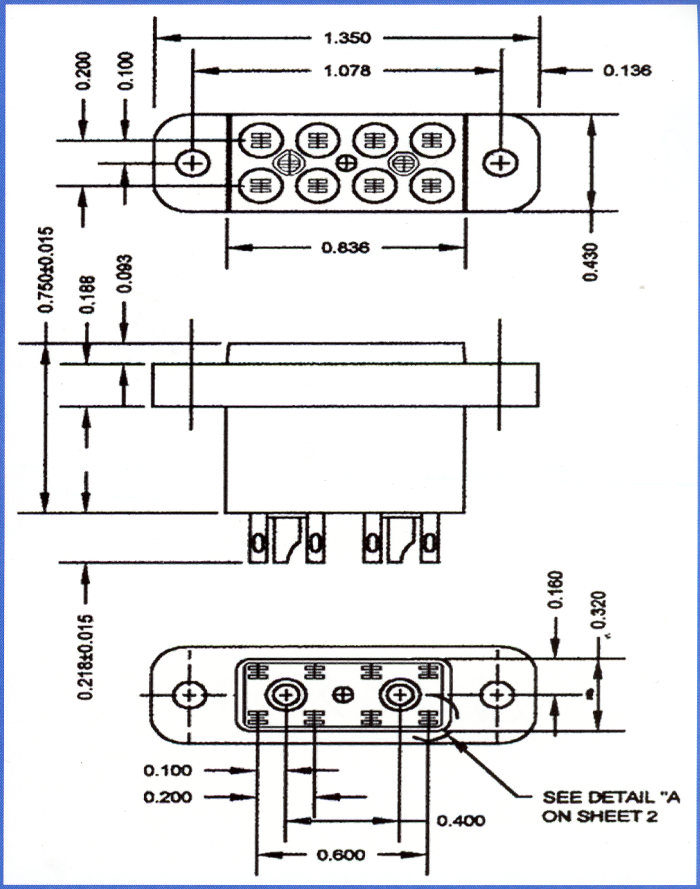

ARMEL
KELVIN SOCKETS

In Molded DAP bodies are NOW AVAILABLE from ARMEL.

Please call 800-840-0666 or e-mail info@armel.us for detailed information regarding these and a complete line of Mil-Spec and Mil-COTS connectors, sockets, terminals and custom hardware.

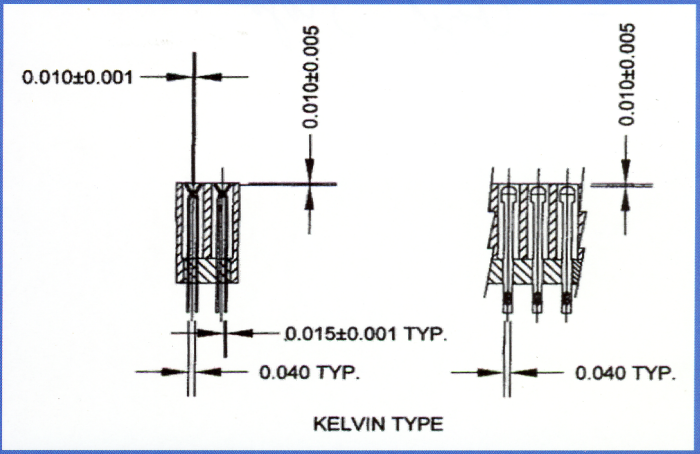

TECHNICAL DATA:

CURRENT RATING: 15 AMP
CONTACT MATERIALS:
PHOSPHOR BRONZE PER QQ-B-750, OR
BERYLIUM COPPER PER QQ-C-530
INSULATION MATERIAL:
DIALLYL ORTHO PHTHALATE PER MIL-M-14

CUSTOM DESIGNED SOCKETS ARE ALSO AVAILABLE

WE CAN DESIGN TO MEET YOUR EXACT NEEDS SO THAT THE SOCKETS WILL MEET YOUR TEST REQUIREMENTS. CONTACT ARMEL'S SALES DEPARTMENT AT 1-800-840-0666 FOR FULL DETAILS.

ARMEL ELECTRONICS, INC.

1601 75TH STREET
NORTH BERGEN, NEW JERSEY 07047
PHONE: 800-840-0666 • FAX: 201-869-4304 • E-MAIL: INFO@ARMEL.US

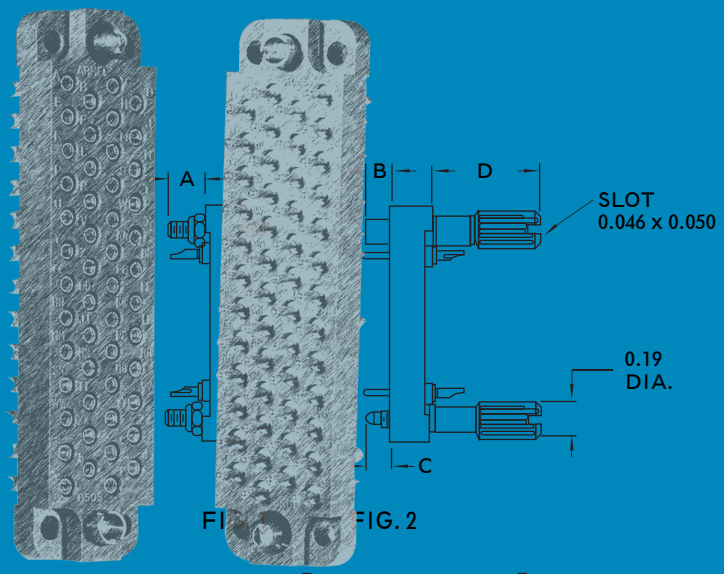

FIG. 2

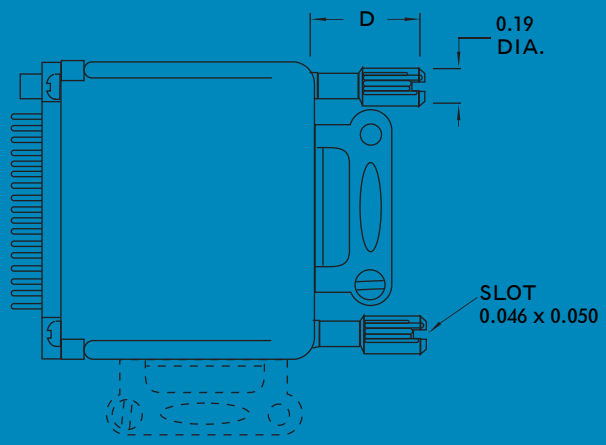

FIG. 3

rack and panel connectors

CONNECTOR INDEX

The rack and panel connectors produced by Armel Electronics, Inc. have been designed to comply with the highest performance requirements for aircraft, communication, and other electronic systems. Rigorous, in-process inspections and stringent quality control requirements have guaranteed the required performance.

These connectors, designed for today's applications, offer proof of our capability to design connectors for your specific requirement.

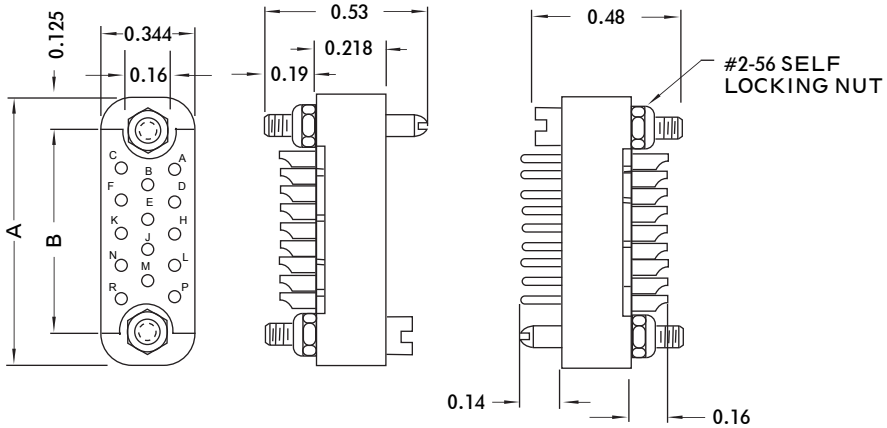

D11S-1JV2 D11P-1JV2

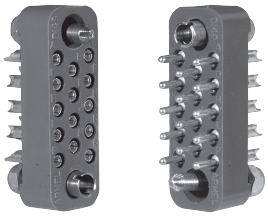

D14S-1JV2 D14P-1JV2

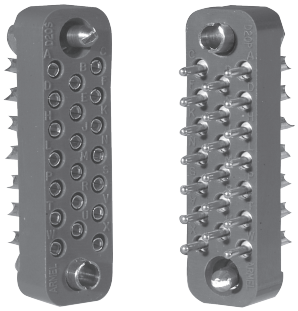

D20S-1JV2 D20P-1JV2

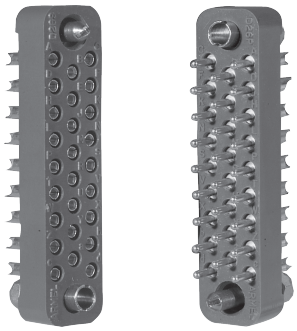

2D26S-1JV2 2D26P-1JV2

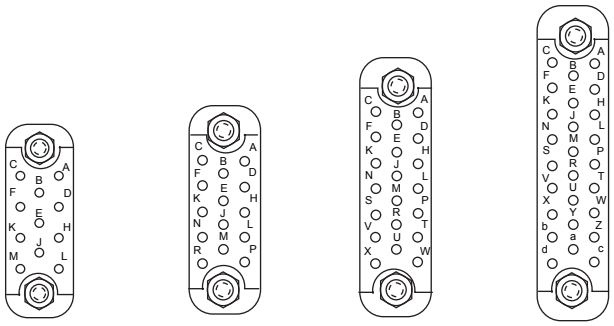

D11S D14S D20S 2D26S

TERMINAL IDENTIFICATION
(VIEWED FROM WIRING END OF
FEMALE CONNECTOR)

Part No.	Type	No. Of Contact	Weight	Dimensions	
				A	B
D11 S IJV2	RECEPTACLE	11	0.11 oz.	0.88	0.625
D11 P IJV2	PLUG		0.14 oz.		
D14 S IJV2	RECEPTACLE	14	0.13 oz.	1.00	0.750
D14 P IJV2	PLUG		0.15 oz.		
D20 S IJV2	RECEPTACLE	20	0.16 oz.	1.25	1.000
D20 P IJV2	PLUG		0.20 oz.		
D26 S IJV2	RECEPTACLE	26	0.19 oz.	1.50	1.250
D26 P IJV2	PLUG		0.24 oz.		

D 34 P1 -32 HI J V2

- CONTACT PLATING
- INSULATION MATERIAL "J" (PAGE18)
- HOOD (PAGE 03) OPTIONAL
- LOCKING DEVICE (PAGE 04) OPTIONAL
- CHOICE OF SELF LOCKING NUT (1) STANDARD OR HEX NUT AND LOCKWASHER (2)
- PLUG (P) RECEPTACLE (S)
- NO. OF CONTACTS
- SUB-MINIATURE SERIES

FOR MECHANICAL AND ELECTRICAL SPECIFICATIONS SEE PAGE 05

D34S-1JV2

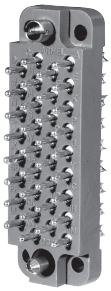

D34P-1JV2

D42S-1JV2

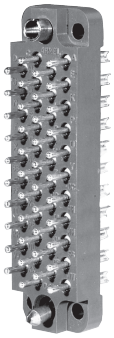

D42P-1JV2

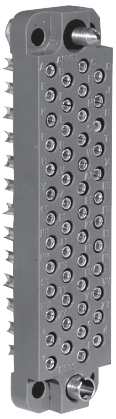

D50S-1JV2

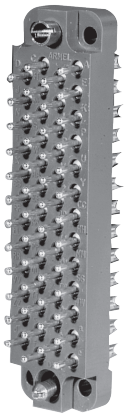

D50P-1JV2

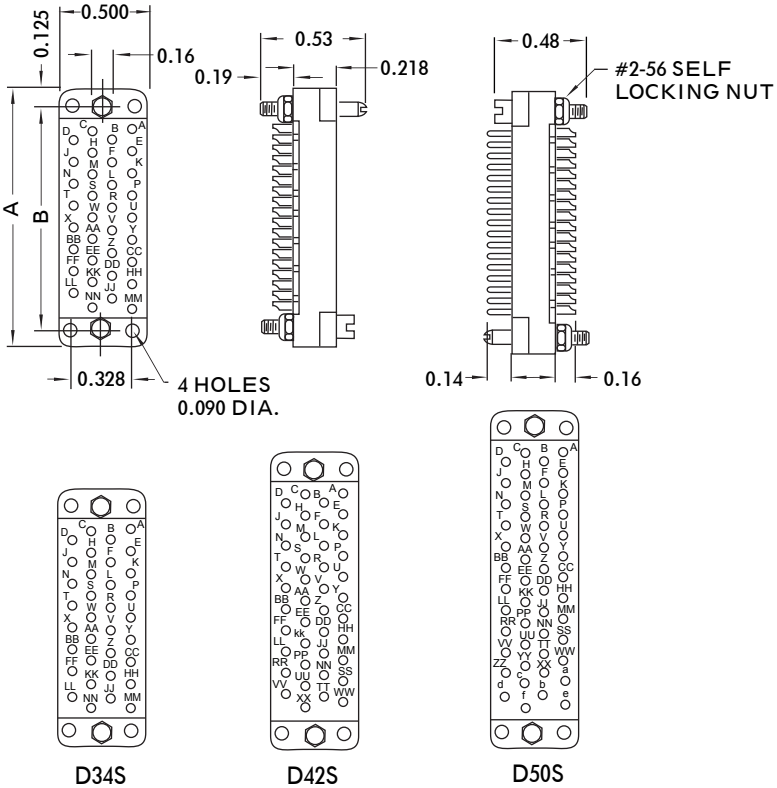

TERMINAL IDENTIFICATION
(VIEWED FROM WIRING END OF FEMALE CONNECTOR)

Part No.	Type	No. Of Contact	Weight	Dimensions	
				A	B
D34 S IJV2	RECEPTACLE	34	0.24 oz.	1.56	1.312
D34 P IJV2	PLUG		0.31 oz.		
D42 S IJV2	RECEPTACLE	42	0.30 oz.	1.81	1.562
D42 P IJV2	PLUG		0.39 oz.		
D50 S IJV2	RECEPTACLE	50	0.34 oz.	2.06	1.812
D50 P IJV2	PLUG		0.46 oz.		

D 34 P1 -32 HI J V2

- CONTACT PLATING
- INSULATION MATERIAL "J" (PAGE 18)
- HOOD (PAGE 03) OPTIONAL
- LOCKING DEVICE (PAGE 04) OPTIONAL
- CHOICE OF SELF LOCKING NUT (1) STANDARD OR HEX NUT AND LOCKWASHER (2)
- PLUG (P) RECEPTACLE (S)
- NO. OF CONTACTS
- SUB-MINIATURE SERIES

FOR MECHANICAL AND ELECTRICAL SPECIFICATIONS SEE PAGE 05

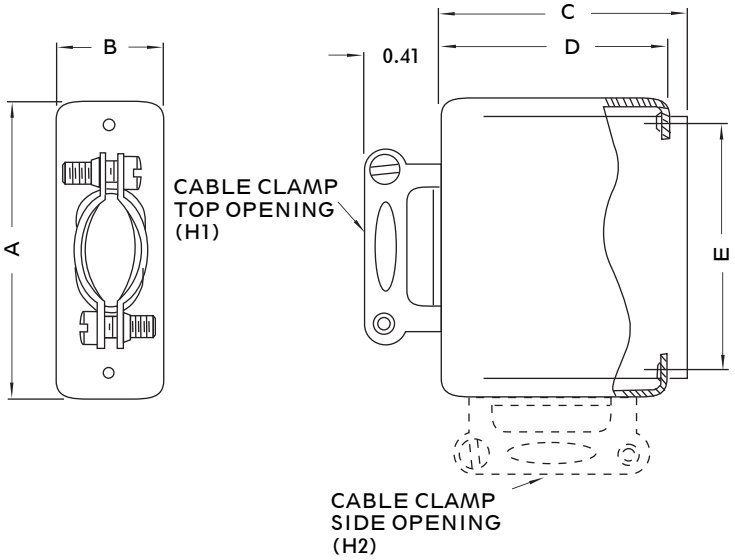

Part No.	Clamp Position	Clamp Opening	Weight (Hood)	Dimensions				
				A	B	C	D	E
D11 H1	TOP	0.25 X 0.28	0.24 oz.	0.94	0.41	1.09	0.94	0.62
D11 H2	SIDE							
D14 H1	TOP	0.25 X 0.34	0.27 oz.	1.06	0.41	1.09	0.94	0.75
D14 H2	SIDE							
D20 H1	TOP	0.25 X 0.44	0.30 oz.	1.31	0.41	1.31	1.19	1.00
D20 H2	SIDE							
D26 H1	TOP	0.25 X 0.56	0.33 oz.	1.56	0.41	1.31	1.19	1.25
D26 H2	SIDE							
D34 H1	TOP	0.31 X 0.59	0.36 oz.	1.56	0.56	1.31	1.19	1.31
D34 H2	SIDE							
D42 H1	TOP	0.38 X 0.67	0.39 oz.	1.81	0.56	1.31	1.19	1.56
D42 H2	SIDE							
D50 H1	TOP	0.38 X 0.67	0.41 oz.	2.06	0.56	1.31	1.19	1.81
D50 H2	SIDE							

NOTE: CONNECTOR AND HOOD ASSEMBLY ORDER AS I.E. D20S-1-H1JV2

D34 H1

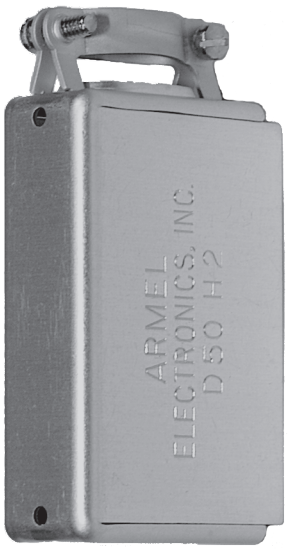

D50 H2

SPECIFICATIONS:

The aluminum hood with cable clamps provide excellent strain relief characteristics for the cable, forms a shield and acts as a convenient grip when disconnecting plug and receptacle.

Cable Clamp is mounted on 4 (instead of conventional 2) mounting legs, thereby providing a more rigid mounting with no cable sway in any direction.

Mounting:

Hood may be mounted on either male or female half of connector.

Material . . . . . .Aluminum per QQ-A-318
Finish. . . . . .Anodized per MIL-A-8625

FOR MECHANICAL AND ELECTRICAL SPECIFICATIONS SEE PAGE 05

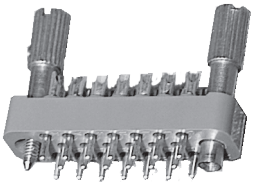

D20P1-31JV2

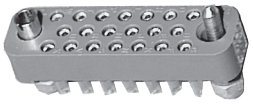

D20S1-21JV2

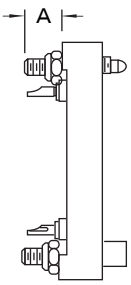

FIG. 1

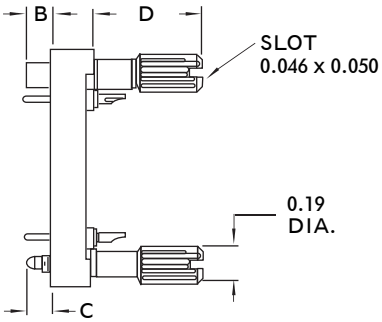

FIG. 2

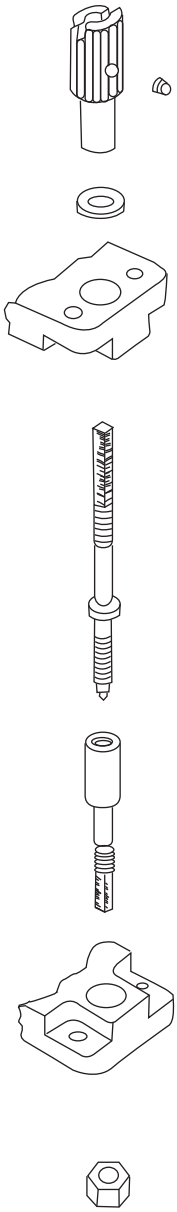

D50P1-32HIJV2

D50S1-21JV2

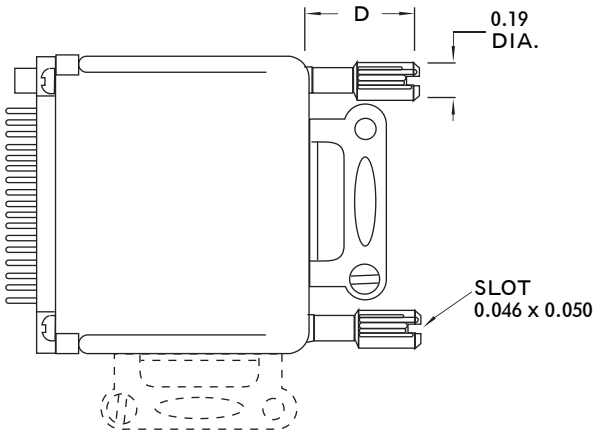

FIG. 3

LOCKING DEVICE (POLARIZED)							FIG. NO.
PART NO.	WEIGHT		DIMENSIONS				
	ROTATING	NON-ROT	A	B	C	D	
21		.04 oz.	0.19	0.11	0.12	0.56	1
31	.18 oz.						2
32	.18 oz.						3

LOCKING DEVICE:
POSITIVE LOCKING DEVICE HARWARE
PREVENTS DISENGAGEMENT DURING VIBRATION
AND SHOCK AND AVOIDS ACCIDENTAL DISCONNECT.

MATERIAL: STAINLESS STEEL
FINISH: PASSIVATED

SPECIFICATIONS

Listed below are the general specifications applicable to the illustrated D series rack and panel connectors.

ELECTRICAL

Current Rating	5 Amperes
Solder Pot Accommodation	One #20 AWG Wire
Dielectric-Withstanding Voltage Contact to Contact Sea Level	1500 VRMS Minimum

MECHANICAL

Contact Diameter	0.040
Creepage Between Contacts	0.06 Minimum
Air Space Between Contacts	0.05 Minimum
Polarization	Guide Pins and Contact Arrangement
Guide Pins and Sockets	Stainless Steel, Passivated
Female Contacts	Spring Temper Grade "A" Phosphor Bronze, or Heat Treated Beryllium Copper. Gold Plated over Copper or Nickel Plate
Male Contacts	Brass, Gold Plated over Copper or Nickel Plate
Self Locking Nut	Brass, Cadmium Plated, Gold Iridite finish
Hex Nut Lockwasher	Stainless Steel, Passivated
Insulation Material	Standard insulation material for "D" series connectors is Diallyl Phthalate, fiberglass filled, type GDI-30F Choice of other "Mil Approved" Thermosetting
Temperature Range	-60°C to +125°C

MP6SJV2 MP6PJV2

MP10SJV2 MP10PJV2

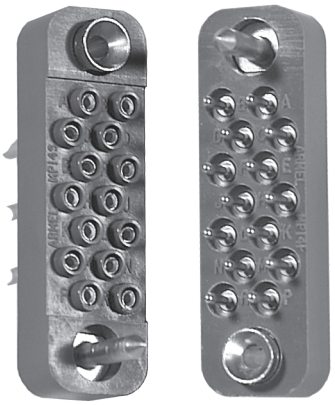

MP14SJV2 MP14PJV2

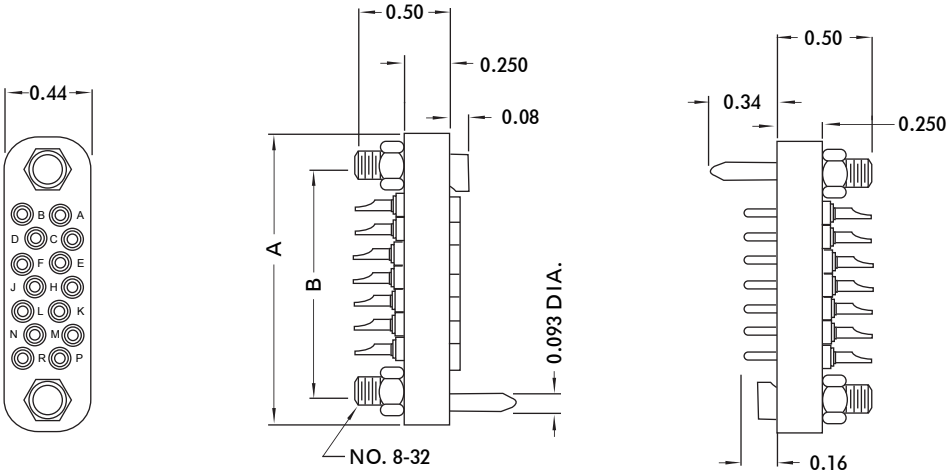

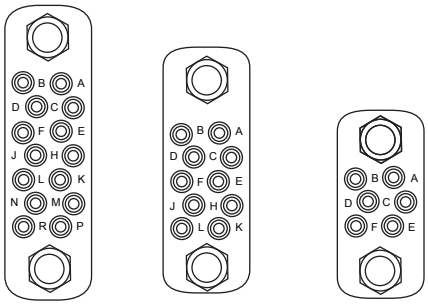

MP14S MP10S MP6S

TERMINAL IDENTIFICATION
(VIEWED FROM WIRING END OF
FEMALE CONNECTOR)

Part No.	Type	No. Of Contacts	Weight	Dimensions	
				A	B
MP6SJV2	RECEPTACLE	6	0.25 oz.	1.00	0.687
MP6PJV2	PLUG		0.27 oz.		
MP10SJV2	RECEPTACLE	10	0.30 oz.	1.25	0.937
MP10PJV2	PLUG		0.32 oz.		
MP14SJV2	RECEPTACLE	14	0.32 oz.	1.50	1.188
MP14PJV2	PLUG		0.40 oz.		

FOR HOODS SEE PAGE 08
FOR MECHANICAL AND ELECTRICAL SPECIFICATIONS SEE PAGE 09

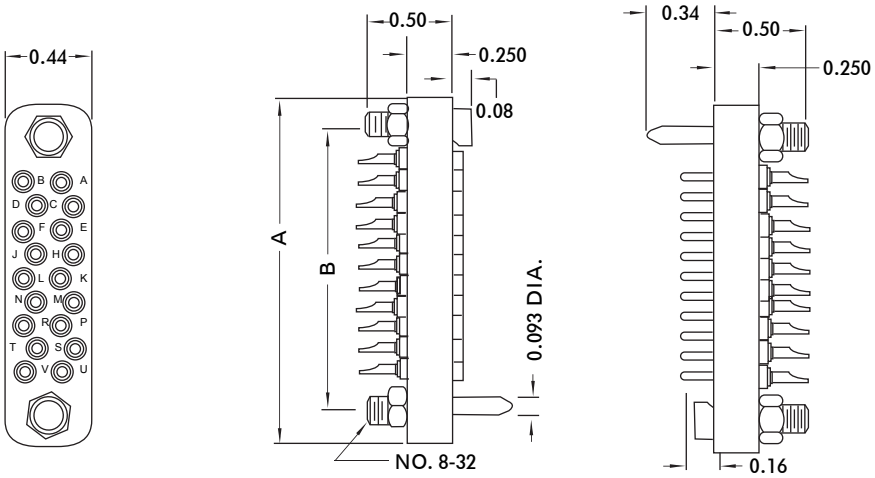

MP 18SJV2 MP 18PJV2

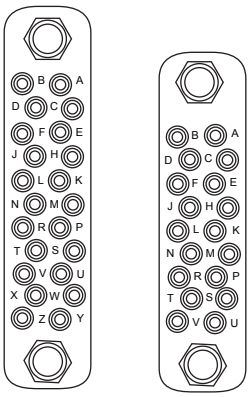

MP 22S MP 18S

TERMINAL IDENTIFICATION
(VIEWED FROM WIRING END OF
FEMALE CONNECTOR)

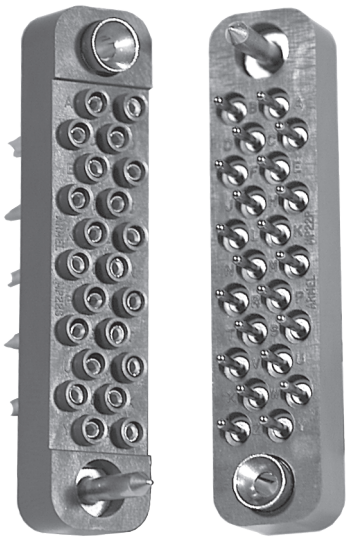

MP 22SJV2 MP 22PJV2

Part No.	Type	No. Of Contacts	Weight	Dimensions	
				A	B
MP18SJV2	RECEPTABLE	18	0.36 oz.	1.75	1.437
MP18PJV2	PLUG		0.46 oz.		
MP22SJV2	RECEPTABLE	22	0.40 oz.	2.00	1.687
MP22PJV2	PLUG		0.52 oz.		

FOR HOODS SEE PAGE 08
FOR MECHANICAL AND ELECTRICAL SPECIFICATIONS SEE PAGE 09

MP SERIES

MP10H

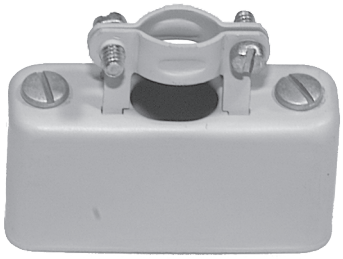

MP14H

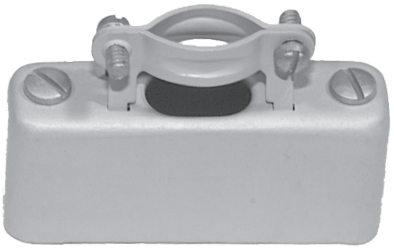

MP18H

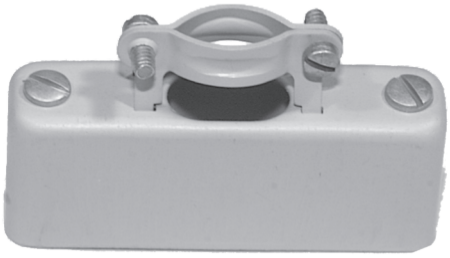

MP22H

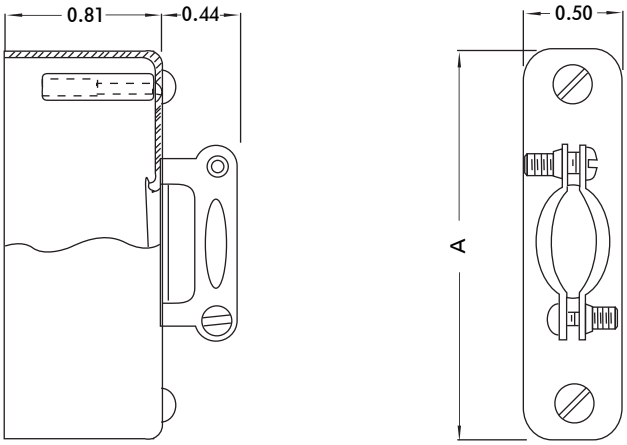

Type	Cable Opening	Weight	Dimensions ?A?
MP10H	0.31 DIA.	0.25 oz.	1.31
MP14H	0.31 x 0.41	0.27 oz.	1.56
MP18H	0.31 x 0.50	0.28 oz.	1.81
MP22H	0.31 x 0.56	0.29 oz.	2.06

NOTE: CONNECTOR AND HOOD ASSEMBLY ORDER AS I.E. M14PH

HOOD:
ONE PIECE DRAWN ANODIZED ALUMINUM WITH NO SLITS OR SEAMS TO OPEN OR TEAR, PROVIDING MAXIMUM PROTECTION.

CABLE CLAMP:
ANODIZED ALUMINUM WITH FOUR (4) MOUNTING LEGS TO PROVIDE RIGID CABLE SUPPORT.

MOUNTING:
MOUNTED BY MEANS OF SPACER NUTS ON EITHER PLUG OR RECEPTACLE.

SPECIFICATIONS

The "MP" Rack and Panel Type Connectors were designed for use in Aircraft, Communications and instrumentation Work. Their weight and size make them particularly adaptable where space and weight limitations are factors.

High Current Leads

A leaf spring is provided in each pilot socket for contact, allowing the pilots to be utilized as high current ground leads.

Extra Creepage

"Bosses" provide extra creepage path.

Listed below are the general specifications applicable to the illustrated series of MP rack and panel connectors.

ELECTRICAL

Current Rating	5 Amperes
Solder Pot Accommodation	One #20 AWG Wire
Dielectric-Withstanding Voltage	
Contact to Contact Sea Level	1800 VRMS Minimum
	450 VRMS Minimum

MECHANICAL

Contact Diameter	0.040
Creepage Between Contacts	0.14 Minimum
Air Space Between Contacts	0.06 Minimum
Polarization	Guide Pins and Contact Arrangement
Male Contacts and Guide Pins	Brass, Gold Plated over Copper or Nickel Plate
Female Contacts and Guide Sockets	Phosphor Bronze, Grade "A" Spring Tempered, Gold Plated over Copper or Nickel Plate.
Insulation Material	Choice of "Mil Approved" Thermosetting Insulations. (See Page 18)
Temperature Range	-65°C to +125°C

SPECIFICATIONS

Listed below are the general specifications applicable to the illustrated series of DP rack and panel connectors.

ELECTRICAL

Current Rating	5 Amperes
Solder Pot Accommodation	One #20 AWG Wire
Dielectric-Withstanding Voltage	
Contact to Contact Sea Level	2250 VRMS Minimum
Contact to Contact 70,000 Ft	500 VRMS Minimum

MECHANICAL

Contact Diameter	0.040
Creepage Between Contacts	0.17 Minimum
Air Space Between Contacts	0.06 Minimum
Polarization	Guide Pins and Contact Arrangement
Male Contacts and Guide Pins	Brass, Gold Plated over Copper or Nickel Plate.
Female Contacts and Guide Sockets	Phosphor Bronze, Grade "A" Spring Tempered, Gold Plated over Copper or Nickel Plate.
Insulation Material	Choice of other "Mil Approved" Thermosetting Insulations. (See Page 18)
Temperature Range	-65°C to +125°C

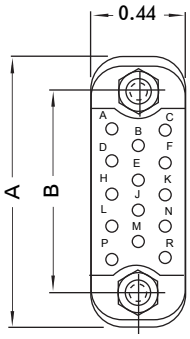

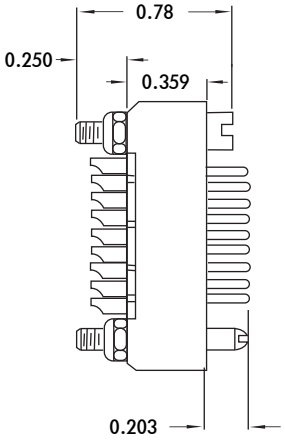

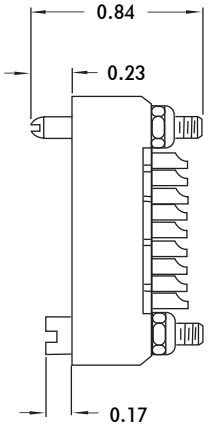

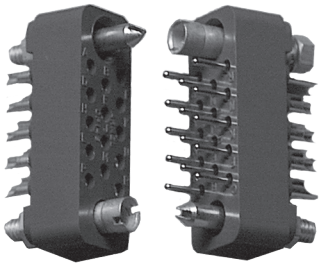

DP14SJV2 DP14PJV2

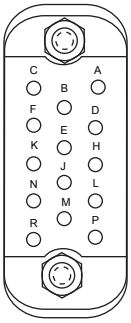

DP14S

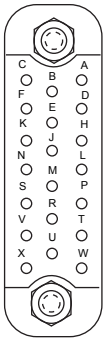

DP20S

TERMINAL IDENTIFICATION
(VIEWED FROM WIRING END OF
FEMALE CONNECTOR)

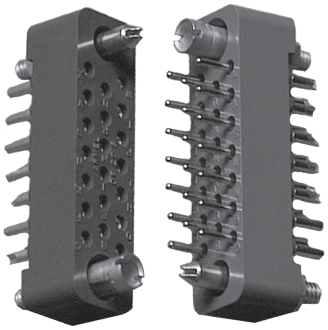

DP20SJV2 DP20PJV2

Part No.	Type	No. Of Contacts	Weight	Dimensions	
				A	B
DP14SJV2	RECEPTACLE	14	0.32 oz.	1.25	0.937
DP14PJV2	PLUG		0.40 oz.		
DP20SJV2	RECEPTACLE	20	0.36 oz.	1.56	1.250
DP20PJV2	PLUG		0.46 oz.		

FOR MECHANICAL AND ELECTRICAL SPECIFICATIONS SEE PAGE 10

SPECIFICATIONS

Listed below are the general specifications applicable to the illustrated series of SN rack and panel connectors.

ELECTRICAL

Current Rating	10 Amperes
Solder Pot Accommodation	One #16 AWG Wire
Dielectric-Withstanding Voltage	
Contact to Contact Sea Level	2700 VRMS Minimum
	560 VRMS Minimum

MECHANICAL

Contact Diameter	0.062
Creepage Between Contacts	0.22 Minimum
Air Space Between Contacts	0.09 Minimum
Polarization	Guide Pins and Contact Arrangement
Male Contacts and Guide Pins	Brass, Gold Plated over Copper or Nickel Plate.
Female Contacts and Guide Sockets	Phosphor Bronze, Grade "A" Spring Tempered, Gold Plated over Copper or Nickel Plate.
Insulation Material	Choice of other "Mil Approved" Thermosetting Insulations. (See Page 18)
Temperature Range	-65°C to +125°C

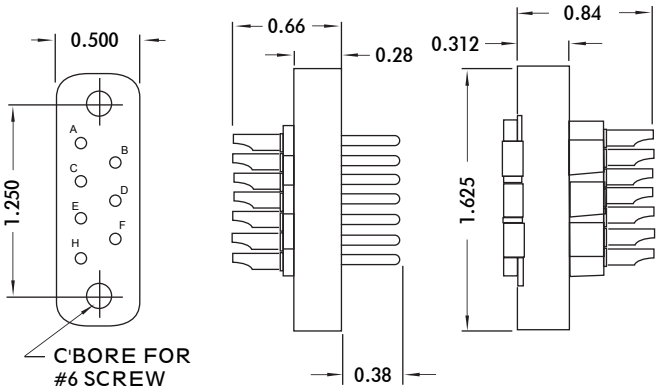

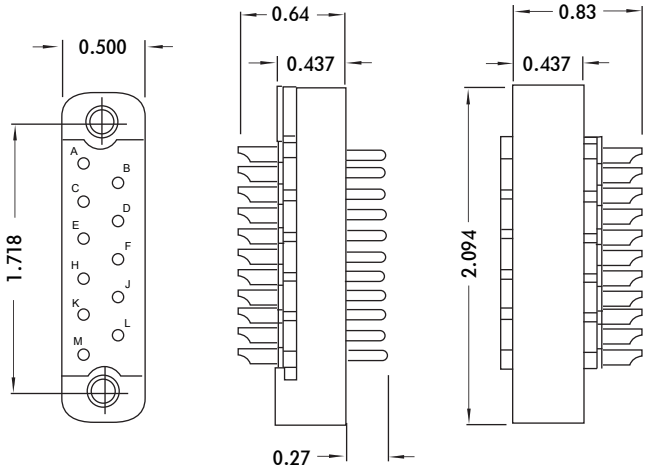

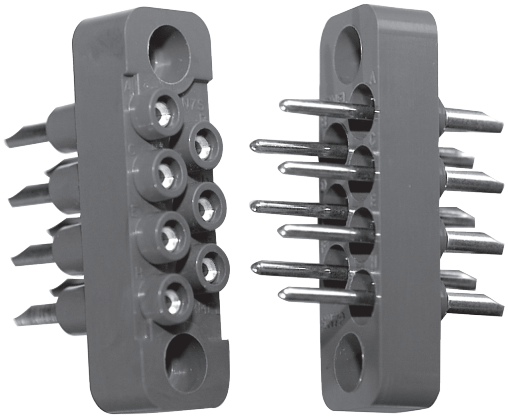

SN7SJV2 SN7PJV2

SN11SJV2 SN11PJV2

Part No.	Type	No. Of Contacts	Weight
SN7SJV2	RECEPTACLE	7	0.39 oz.
SN7PJV2	PLUG		0.43 oz.
SN11SJV2	RECEPTACLE	11	0.60 oz.
SN11PJV2	PLUG		0.86 oz.

FOR MECHANICAL AND ELECTRICAL SPECIFICATIONS SEE PAGE 12

SPECIFICATIONS

Listed below are the general specifications applicable to the illustrated series of SP rack and panel connectors.

ELECTRICAL

Current Rating	10 Amperes
Solder Pot Accommodation	One #16 AWG Wire
Dielectric-Withstanding Voltage	
Contact to Contact Sea Level	2700 VRMS Minimum
	560 VRMS Minimum

MECHANICAL

Contact Diameter	0.062
Creepage Between Contacts	0.25 Minimum
Air Space Between Contacts	0.09 Minimum
Polarization	Guide Pins and Contact Arrangement
Male Contacts and Guide Pins	Brass, Gold Plated over Copper or Nickel Plate.
Female Contacts and Guide Sockets	Phosphor Bronze, Grade "A" Spring Tempered, Gold Plated over Copper or Nickel Plate.
Insulation Material	Choice of other "Mil Approved" Thermosetting Insulations. (See Page 18)
Temperature Range	-65°C to +125°C

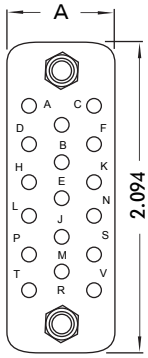

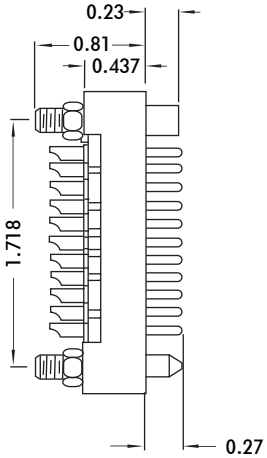

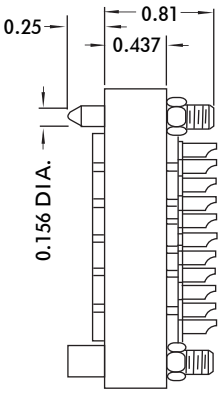

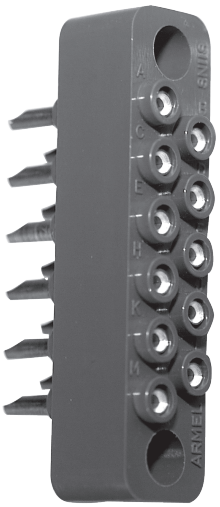

SP11SJV2

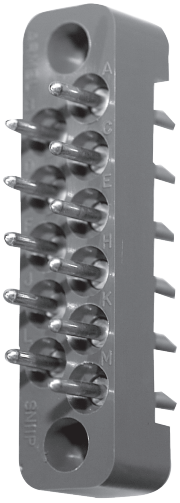

SP11PJV2

SP11S

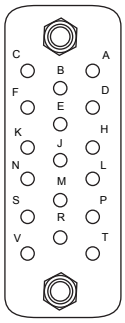

SP17S

TERMINAL IDENTIFICATION
(VIEWED FROM WIRING END OF
FEMALE CONNECTOR)

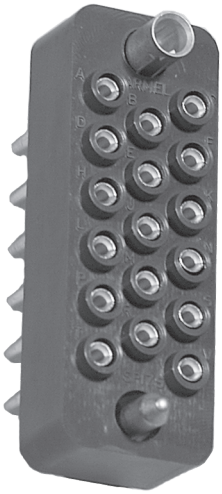

SP17SJV2

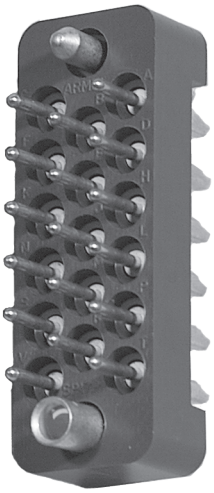

SP17PJV2

Part No.	Type	No. Of Contacts	Weight	Dimensions A
SP11SJV2	RECEPTACLE	11	0.74 oz.	0.500
SP11PJV2	PLUG		0.99 oz.	
SP17SJV2	RECEPTACLE	17	0.98 oz.	0.750
SP11PJV2	PLUG		1.50 oz.	

FOR MECHANICAL AND ELECTRICAL SPECIFICATIONS SEE PAGE 14

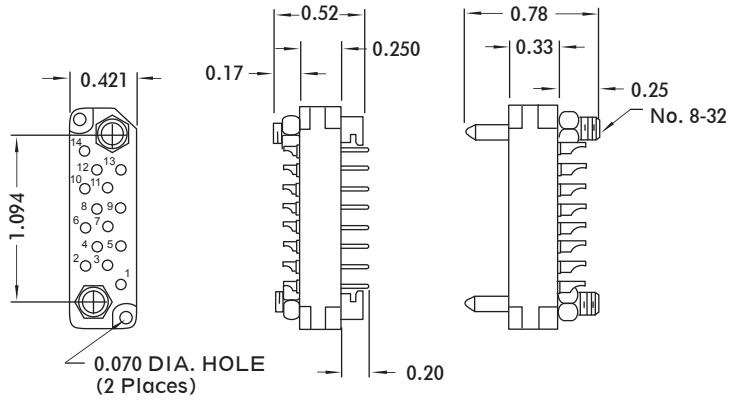

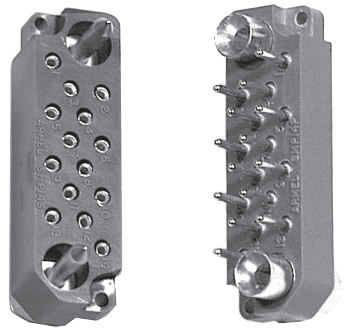

SMP14SJV2 SMP14PJV2

SPECIFICATIONS

Listed below are the general specifications applicable to the illustrated SMP type connector.

Part No.	Type	No. Of Contacts	Weight	Current Rating (Amps.)	Surface Creepage (Min.)	Air Space (Min.)	Contact Dia.	Solder Cup Accomodation
SMP 14SJV2	RECEPTABLE	14	0.32 oz.	5	0.08	0.08	0.040	ONE #20 AWG WIRE
SMP 14PJV2	PLUG		0.40 oz.					

SMP TYPE

Dielectric Withstanding Voltage

Contact to Contact, Sea Level. . . . . 1500 VRMS Minimum

Contact to Contact, 70,000 Ft. . . . . 375 VRMS Minimum

Male Contacts and Guide Pins. . . . . Brass, Gold Plated over Copper or Nickel Plate

Female Contacts and Guide Sockets. . . . . Phosphor Bronze, Gold Plated over Copper or Nickel Plate

POWER CONNECTORS, WITH SOCKET AND BLADE POSITIONS POPULATED AS 1-2-3, 1-3-5, OR 1-2-3-4 WITH REMAINING POSITION(S) LEFT OUT, OR FULLY POPULATED AS SHOWN BELOW; CONNECTORS MEET SPECIFICATION 645A748

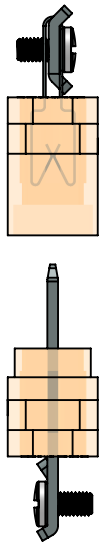

INSULATOR AND INSERTS SHOWN TRANSPARENT IN SIDE VIEW

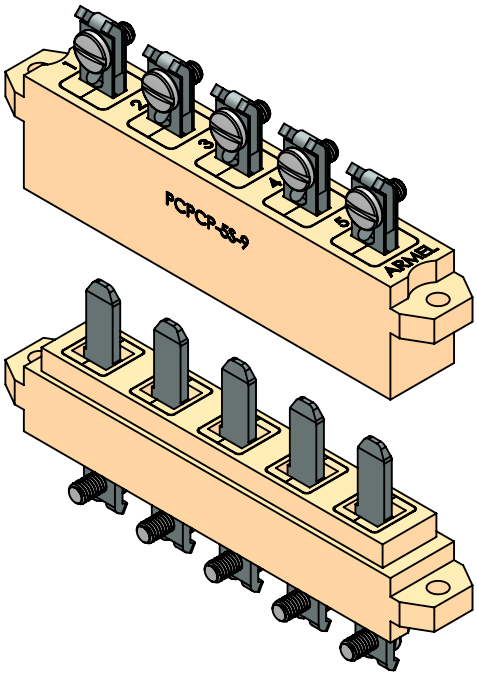

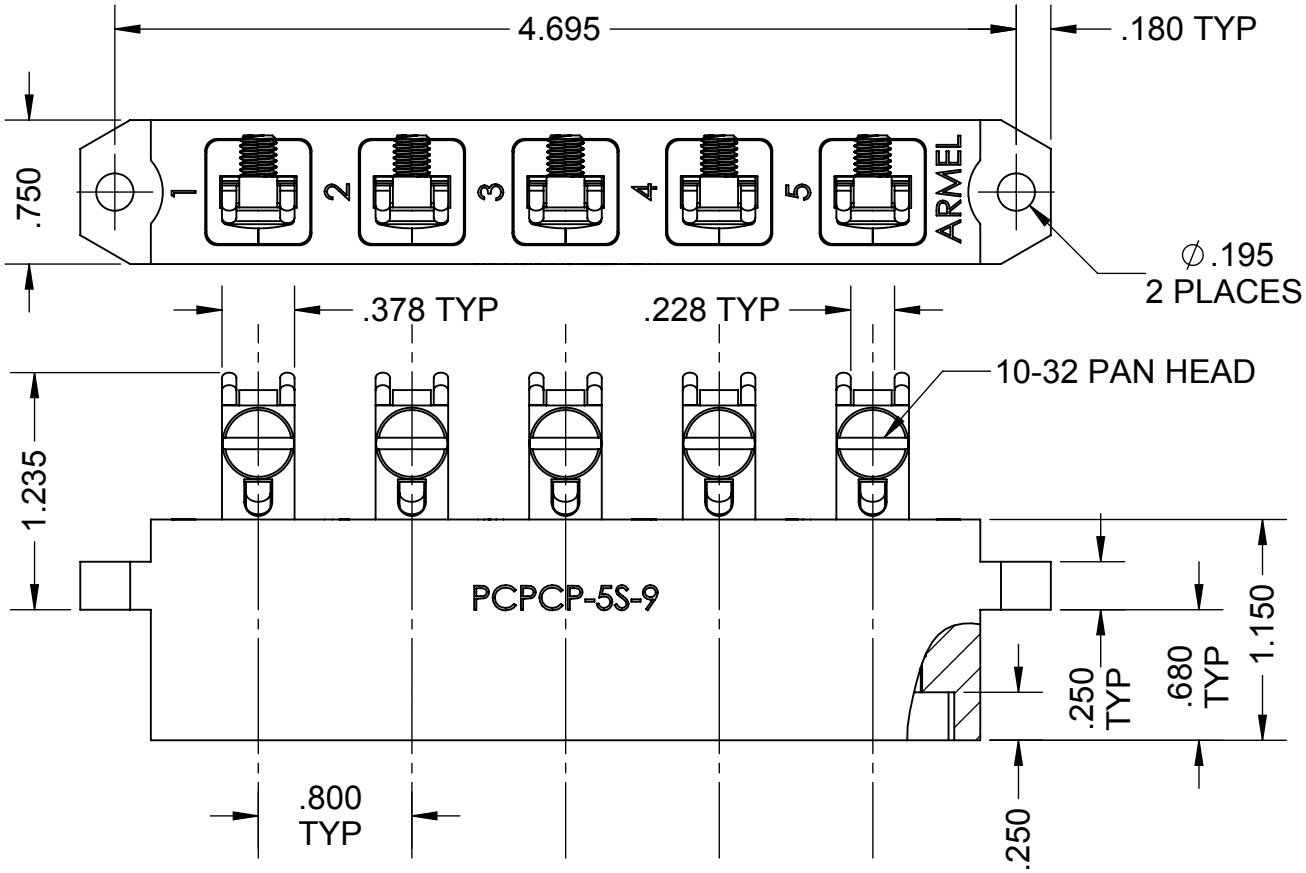

FOR MECHANICAL AND ELECTRICAL SPECIFICATIONS SEE CATALOG PAGE 19

PCPCP SERIES

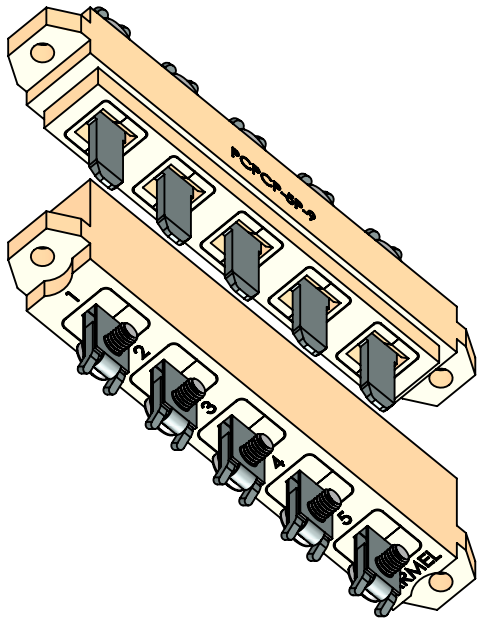

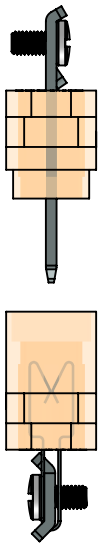

INSULATOR AND INSERTS SHOWN TRANSPARENT
IN SIDE VIEW

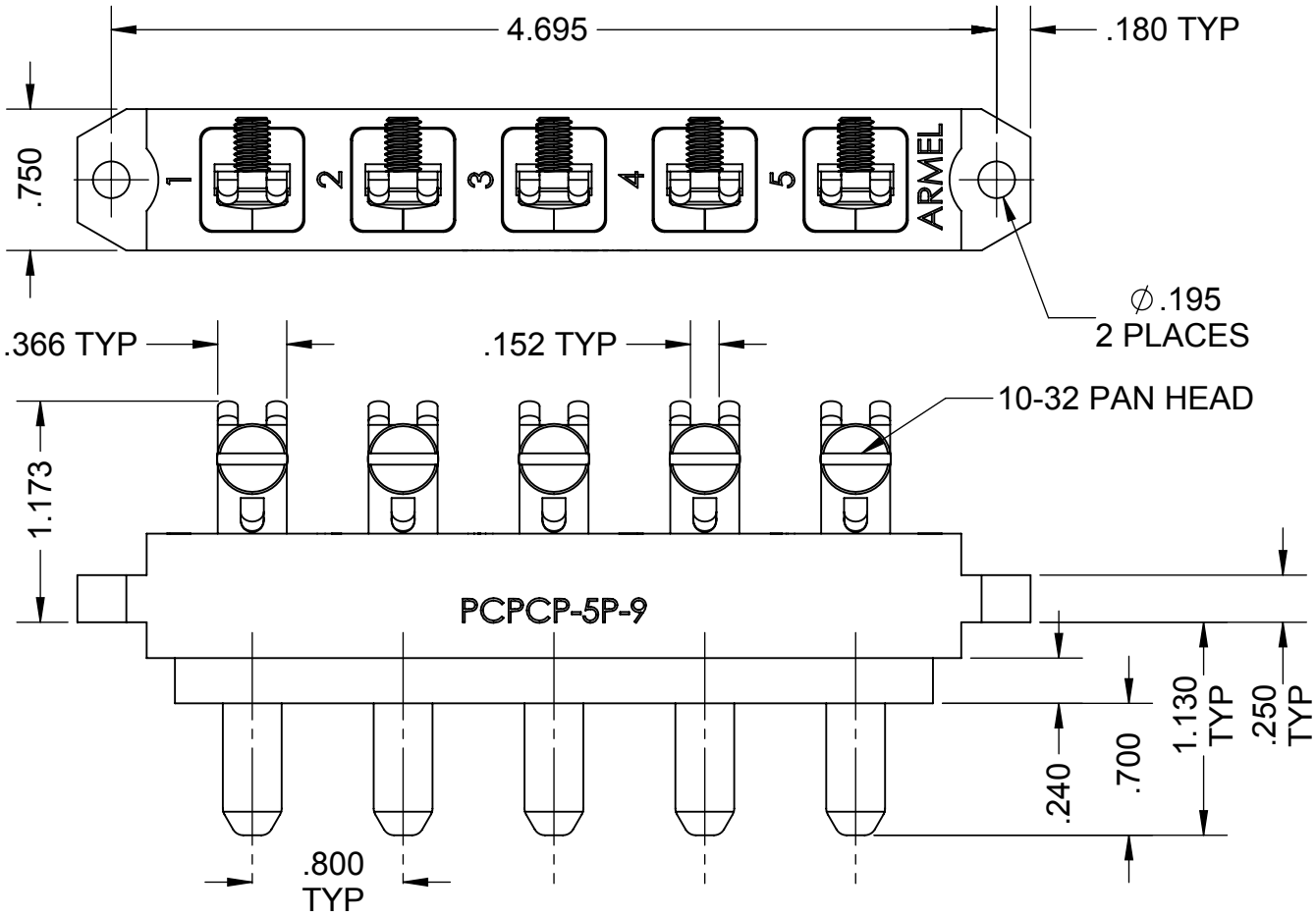

FOR MECHANICAL AND ELECTRICAL SPECIFICATIONS SEE CATALOG PAGE 20

SOCKET POWER CONNECTOR

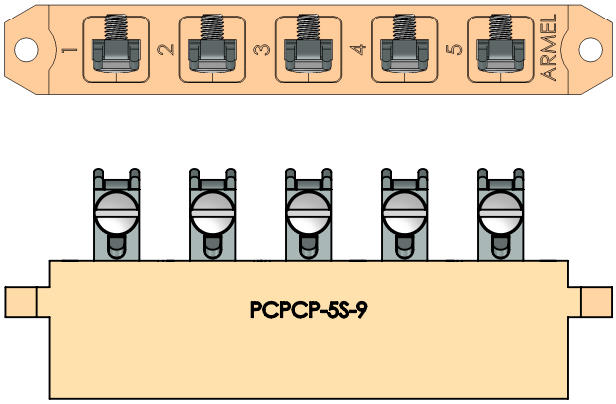

SPECIFICATIONS

ELECTRICAL

Current Rating.....See Table At Bottom
Dielectric Withstanding Voltage.....
Contact to Contact
Sea Level.....1000 VRMS @ 60 Hz

MECHANICAL

Contact Material & Finish.....Beryllium Copper, C17200,1/2 Hard Per ASTM B194, Silver Plate.0003 In. Min. Thk.,Type 1, Per QQ-S-365, Grade A, Over .0001 In. Min. Thk. Copper Plate Per MIL-C-14550, Class 4.
Wire Clamp Screw Material & Finish.....Type 316 Stainless Steel & Passivated
Body & Contact Retainer Material.....Ultem 2300, Color: Light Brown
Contact Retainer Bonding Material.....Weld-On 3 Acrylic Plastic Cement

PART NO.	CONTACT, INSERTS & CAVITY IN POSITONS	NO CONTACT, INSERTS, OR CAVITY IN POSITIONS	MAX CONTACT CURRENT @ 250 VOLTS (AMPS)
PCPCP-3S-9	1,2,3	4,5	45
PCPCP-3AS-9	1,3,5	2,4	60
PCPCP-4S-9	1,2,3,4	5	45
PCPCP-5S-9	1,2,3,4,5	- (SHOWN)	60*

*ENSURE MATING CONNECTOR HAS SAME NUMBER OF CONTACTS AND BLADE CONTACT MATERIAL IS SILVER COPPER FOR 60 AMP USE, OTHERWISE MAX CURRENT IS 45 AMPS, SEE 645A748.

BLADE POWER CONNECTOR

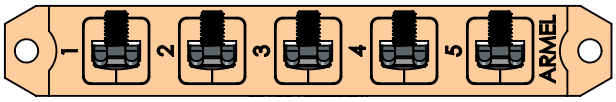

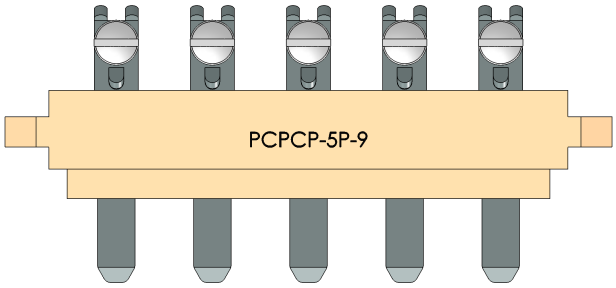

SPECIFICATIONS

ELECTRICAL

Current Rating.....See Table At Bottom
Dielectric Withstanding Voltage.....
Contact to Contact
Sea Level.....1000 VRMS @ 60 Hz

MECHANICAL

Contact Material & Finish.....Copper #113-#116, Spring Temper, Silver Plate .0003 In. Min. Thk.,Type 1, Per QQ-S-365, Grade A, Over .0001 In. Min. Thk. Copper Plate Per MIL-C-14550, Class 4.
Wire Clamp Screw Material & Finish.....Type 316 Stainless Steel & Passivated
Body & Contact Retainer Material.....Ultem 2300, Color: Light Brown
Contact Retainer Bonding Material.....Weld-On 3 Acrylic Plastic Cement

PART NO.	CONTACT, INSERTS & CAVITY IN POSITONS	NO CONTACT, INSERTS, OR CAVITY IN POSITIONS	MAX CONTACT CURRENT @ 250 VOLTS (AMPS)
PCPCP-3P-9	1,2,3	4,5	45
PCPCP-3AP-9	1,3,5	2,4	60
PCPCP-4P-9	1,2,3,4	5	45
PCPCP-5P-9	1,2,3,4,5	- (SHOWN)	60

TORPEDO RECEPTACLE CONNECTOR

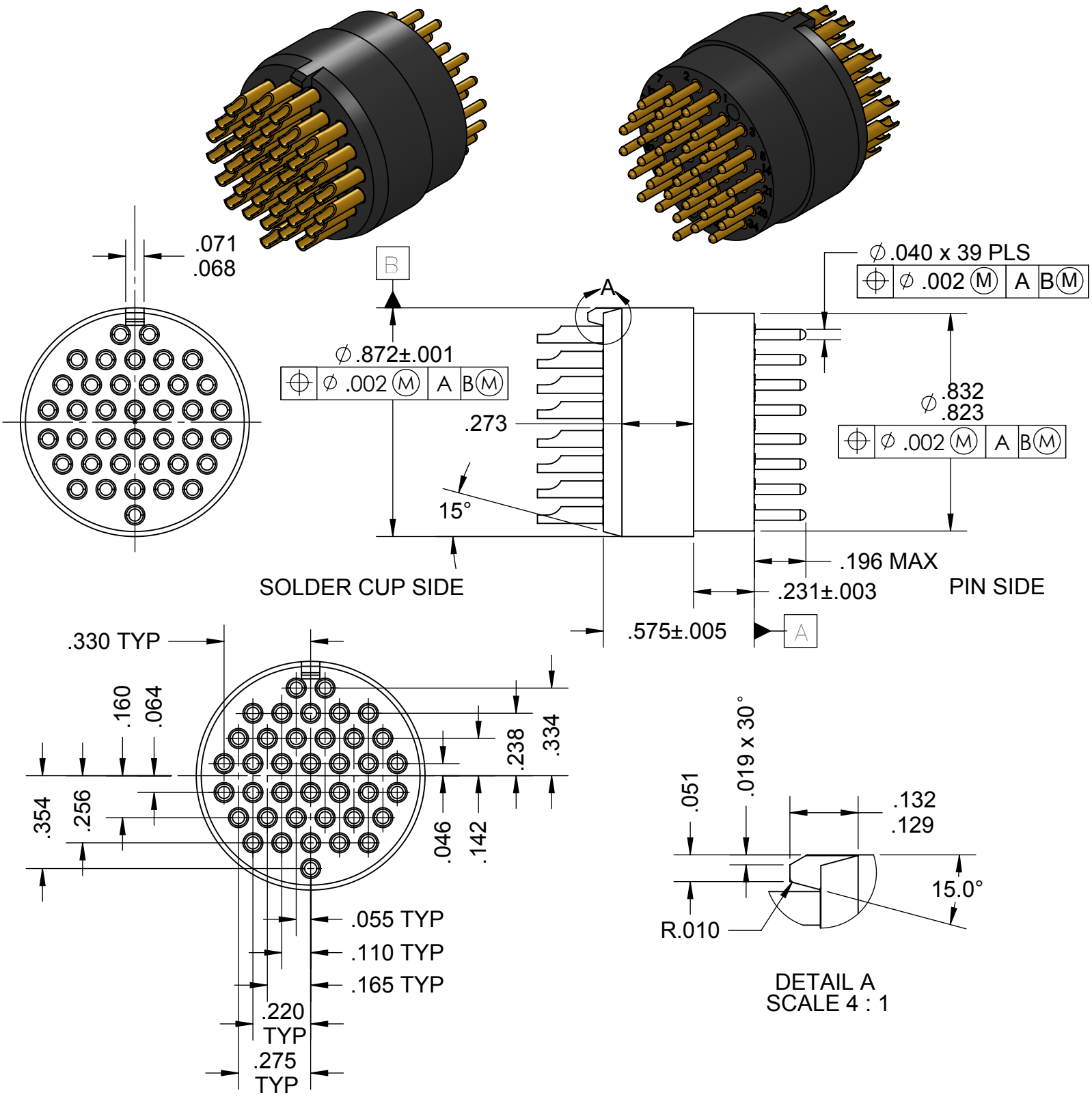

FOR MECHANICAL AND ELECTRICAL SPECIFICATIONS SEE CATALOG PAGE 22

TORPEDO RECEPTACLE CONNECTOR

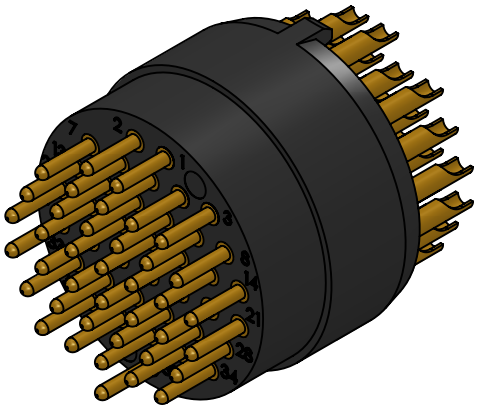

SPECIFICATIONS

ELECTRICAL

Insulation Resistance.....Greater Than 100 MEGAOHMS @ 750 VDC

MECHANICAL

Contact Material & Finish.....#173 Beryllium Copper Alloy Full Hard Per ASTM B 196, Hard Gold Plate Per ASTM 0488, Type A, CL 5.0 Grade C Over Nickel Plate Per AMS-QQ-N-290, Class 2, Grade F

Insulator Body Material.....Epoxy Molding Compound IAW ASTM D 5948, Type GEI-5, Heat Resistence: 180, Color: Black

Contact Sealant.....Silane Based Metal Adhesive, CHEMLOK AP-131 (Lord Corp)

Test.....Connector Must Withstand 2000 PSIG Pressure For A Minimum Of 30 Minutes, No Leakage Permissible

MP6S J V2

SUFFIX 2 CONTACT PLATING
SUFFIX 1 INSULATION MATERIAL
SERIES

MATERIAL CERTIFICATIONS

SUFFIX 1

J	DIALLYL PHTHALATE, GLASS-FIBER FILLED PER MIL-M-14, TYPE GDI 30F
L	DIALLYL PHTHALATE, GLASS-FIBER FILLED PER MIL-M-14, TYPE SDG-F
L2	DIALLYL PHTHALATE, GLASS-FIBER FILLED PER MIL-M-14, TYPE SDG-F COLOR BLACK
H	DIALLYL PHTHALATE, ORLON-FILLED PER MIL-M-14, TYPE SDI-5

SUFFIX 2

V2	GOLD PLATE (0.00005) PER MIL-G-45204, TYPE II, CLASS 1 OVER COPPER PLATE
T3	GOLD PLATE (0.00005) PER MIL-G-45204, TYPE II, CLASS 1 OVER NICKEL PLATE (0.0001) PER QQ-N-290, TYPE VII, CLASS 1 (LOW STRESS NICKEL) OVER COPPER PLATE PER MIL-C-14550, CLASS 4
	OTHER PLATINGS AVAILABLE UPON REQUEST

GENERAL

1. MEET OR EXCEED APPLICABLE REQUIREMENTS OF MIL-C-55302
2. UTILIZE PRECISION MACHINED CONTACTS OF SPRING TEMPER PHOSPHOR BRONZE AND/OR HEAT-TREATED BERYLLIUM COPPER.
3. ALL CONTACTS FREE FLOATING AND SECURELY CONTAINED.
4. CONTACTS GOLD PLATED FOR LOW CONTACT RESISTANCE
5. ADAPTABLE FOR AUTOMATION
6. REDUCES POSSIBILITY OF MOISTURE CONTAMINATION

MATERIAL AND FINISH SPECIFICATIONS

STAINLESS STEEL	QQ-S-763/766 TYPE 303 (NON-MAGNETIC)
COLD ROLL STEEL	QQ-S-640, COMPOSITION CR
BRASS	QQ-B-626
PHOSPHOR BRONZE	QQ-B-750
BERYLLIUM COPPER	QQ-C-533
CADMIUM PLATE	QQ-P-416, TYPE II, CLASS 2
NICKEL PLATE	QQ-N-290, TYPE VII, CLASS 2
PASSIVATE	QQ-P-35 / AMS 2700
HOT TIN DIP	MIL-T-10727, TYPE II

ARMEL ELECTRONICS, INC.
1601 75TH STREET NORTH BERGEN, NJ 07047

WEBSITE WWW.ARMELELECTRONICS.COM

FAX 201-869-4304 E-MAIL INFO@ARMELELECTRONICS.COM

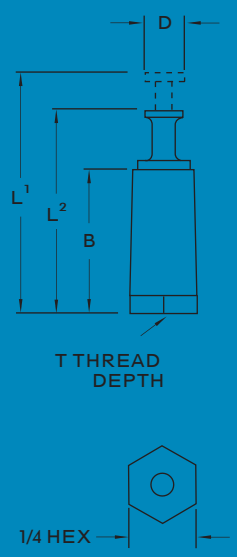

PART NO.	"A"	BREAKDOWN VOLTAGE AC
GSTMTC-124	0.062	10,000
[illegible]	0.070	10,000

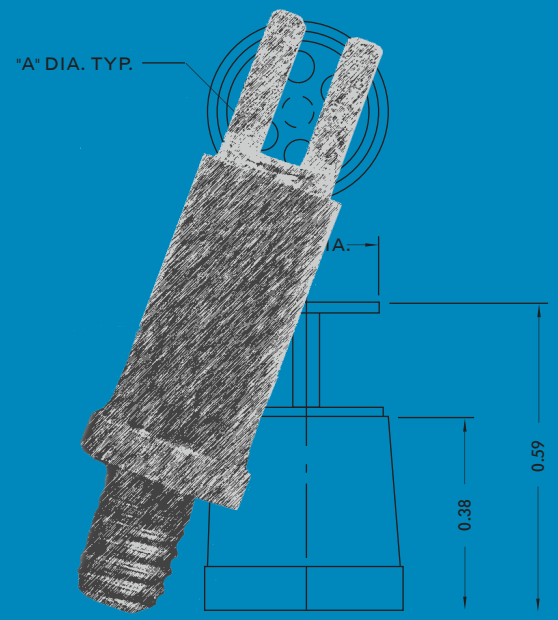

terminals

ARMEL®

TERMINAL INDEX

ARMEL stand-off terminals, both standard size and miniature, meet the most exacting demands of various electrical and electronic applications for tie points, insulators, and wire terminuses.

Available with either a PLASTIC or METAL BASE, each terminal is individually inspected to provide our customers with ARMEL quality components.

Solder terminals, mounting studs, insulations, and platings may be varied to meet customer's specifications.

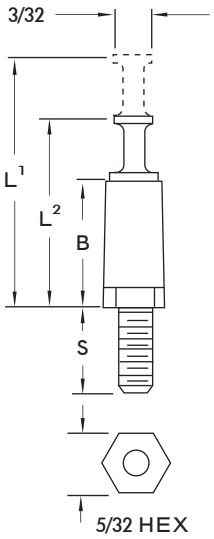

PLASTIC BASE	METAL BASE	DIMENSIONS						BREAKDOWN VOLTS AC
		THD. SIZE	RIVET DIA.	B	L1	L2	S	
DTS-7		2-56		7/32		3/8	7/32	3,500
DTR-7			0.077				3/32	
	DTMS-7	2-56		15/64		25/64	7/32	
	DTMR-7		0.077				3/32	
DTS-12		2-56		3/8		17/32	7/32	6,000
DTR-12			0.077				3/32	
	DTMS-12	2-56		25/64		35/64	7/32	
	DTMR-12		0.077				3/32	
DLTS-7		2-56		7/32	17/32	3/8	7/32	3,500
DLTR-7			0.077				3/32	
	DLTMS-7	2-56		15/64	35/64	25/64	7/32	
	DLTMR-7		0.077				3/32	
DLTS-12		2-56		3/8	11/16	17/32	7/32	6,000
DLTR-12			0.077				3/32	
	DLTMS-12	2-56		25/64	45/64	35/64	7/32	
	DLTMR-12		0.077				3/32	

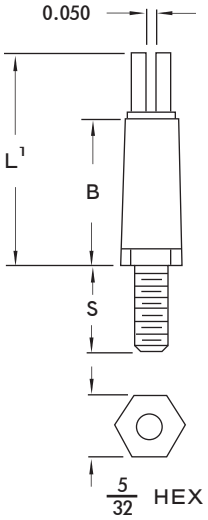

DBS-7		2-56		7/32	25/64		7/32	3,500
DBR-7			0.077				3/32	
	DBMS-7	2-56		15/64	13/32		7/32	
	DBMR-7		0.077				3/32	
DBS-12		2-56		3/8	35/64		7/32	6,000
DBR-12			0.077				3/32	
	DBMS-12	2-56		25/64	9/16		7/32	
	DBMR-12		0.077				3/32	

METAL BASE SHOWN

SEE PAGE 22 FOR MATERIAL SPECIFICATIONS AND ORDERING INSTRUCTIONS.

PART NO.	L	B	X	Y	THREAD SIZE	DEPTH OF THD.	BREAKDOWN VOLTAGE A.C.
STMTC-92	0.40	0.275	0.09	0.125	2-56	0.156	11,000
STMTC-124	0.59	0.375	0.14	0.218	4-40	0.156	11,000
STMTC-72	0.40	0.218	0.09	0.181	2-56	0.094	11,000

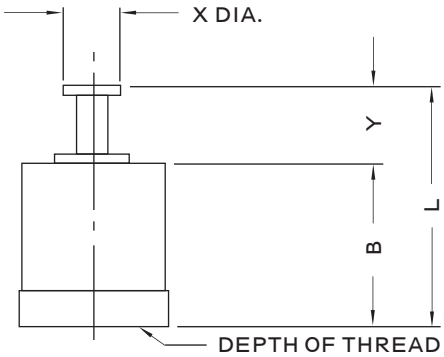

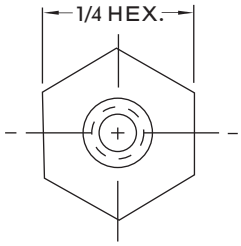

SEE PAGE 22 FOR MATERIAL SPECIFICATIONS AND ORDERING INSTRUCTIONS.

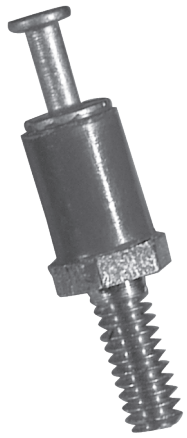

PART NO.	L	B	C	A THREAD	BREAKDOWN VOLTAGE A.C.
DTMSC-727	0.39	0.234	0.218	2-56	10,000
DTMSC-746	0.39	0.234	0.188	4-40	10,000

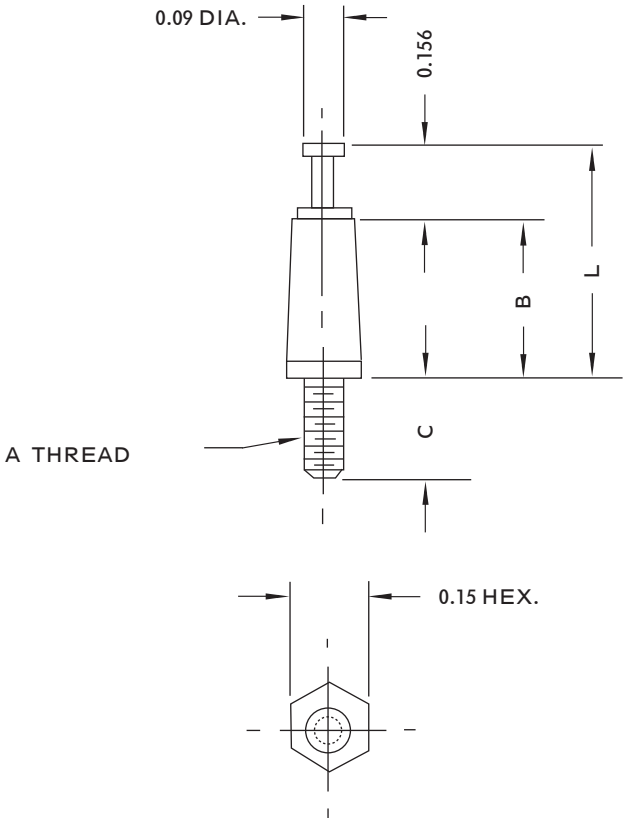

SEE PAGE 22 FOR MATERIAL SPECIFICATIONS AND ORDERING INSTRUCTIONS.

PART NO.	L	B	C	A THREAD	BREAKDOWN VOLTAGE A.C.
DLTMSC-1247	0.70	0.390	0.218	4-40	11,000

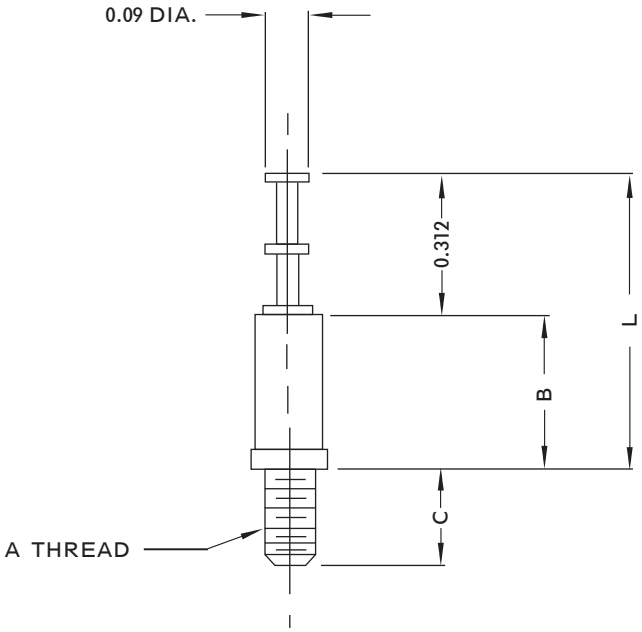

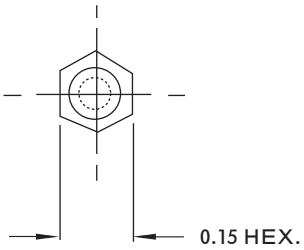

SEE PAGE 22 FOR MATERIAL SPECIFICATIONS AND ORDERING INSTRUCTIONS.

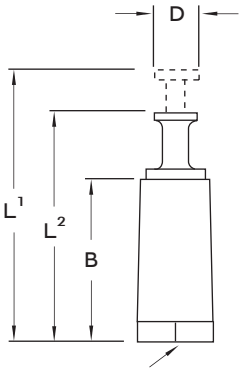

T THREAD DEPTH

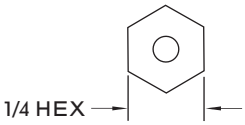

METAL BASE SHOWN

PLASTIC BASE	METAL BASE	THREAD SIZE	DIMENSIONS B	L1	L2	D	T	BREAKDOWN VOLTS AC
TT-12	TMT-12	4-40	3/8	23/32	19/32	9/64	5/32	6,000
TT-12-6	TMT-12-6	6-32						
TT-16	TMT-16	4-40	1/2	27/32	23/32		7/32	9,000
TT-16-6	TMT-16-6	6-32						
TT-17	TMT-17	4-40	17/32	7/8	3/4			10,000
TT-17-6	TMT-17-6	6-32						
TT-19	TMT-19	4-40	19/32	15/16	13/16			12,000
TT-19-6	TMT-19-6	6-32						

STT-12	STMT-12	4-40	3/8		19/32	9/64	5/32	6,000
STT-12-6	STMT-12-6	6-32						
STT-16	STMT-16	4-40	1/2		23/32		7/32	9,000
STT-16-6	STMT-16-6	6-32						
STT-17	STMT-17	4-40	17/32		3/4			10,000
STT-17-6	STMT-17-6	6-32						
STT-19	STMT-19	4-40	19/32		13/16			12,000
STT-19-6	STMT-19-6	6-32						

ATT-12	ATMT-12	4-40	3/8	5/8	17/32	3/32	5/32	6,000
ATT-12-6	ATMT-12-6	6-32						
ATT-16	ATMT-16	4-40	1/2	3/4	21/32		7/32	9,000
ATT-16-6	ATMT-16-6	6-32						
ATT-17	ATMT-17	4-40	17/32	25/32	11/16			10,000
ATT-17-6	ATMT-17-6	6-32						
ATT-19	ATMT-19	4-40	19/32	27/32	3/4			12,000
ATT-19-6	ATMT-19-6	6-32						

SEE PAGE 22 FOR MATERIAL SPECIFICATIONS AND ORDERING INSTRUCTIONS.

TURRET SERIES

PLASTIC BASE	METAL BASE	THREAD SIZE	DIMENSIONS B	DIMENSIONS L[1]	DIMENSIONS L[2]	DIMENSIONS D	BREAKDOWN VOLTAGE AC
TS-12		4-40	3/8	23/32	19/32	9/64	6,000
	TMS-12						
TS-12-6		6-32					
	TMS-12-6						
TS-16		4-40	1/2	27/32	23/32		9,000
	TMS-16						
TS-16-6		6-32					
	TMS-16-6						
TS-17		4-40	17/32	7/8	3/4		10,000
	TMS-17						
TS-17-6		6-32					
	TMS-17-6						
TS-19		4-40	19/32	15/16	13/16		12,000
	TMS-19						
TS-19-6		6-32					
	TMS-19-6						
STS-12		4-40	3/8		19/32	9/64	6,000
	STMS-12						
STS-12-6		6-32					
	STMS-12-6						
STS-16		4-40	1/2		23/32		9,000
	STMS-16						
STS-16-6		6-32					
	STMS-16-6						
STS-17		4-40	17/32		3/4		10,000
	STMS-17						
STS-17-6		6-32					
	STMS-17-6						
STS-19		4-40	19/32		13/16		12,000
	STMS-19						
STS-19-6		6-32					
	STMS-19-6						
ATS-12		4-40	3/8	5/8	17/32	3/32	6,000
	ATMS-12						
ATS-12-6		6-32					
	ATMS-12-6						
ATS-16		4-40	1/2	3/4	21/32		9,000
	ATMS-16						
ATS-16-6		6-32					
	ATMS-16-6						
ATS-17		4-40	17/32	25/32	11/16		10,000
	ATMS-17						
ATS-17-6		6-32					
	ATMS-17-6						
ATS-19		4-40	19/32	27/32	3/4		12,000
	ATMS-19						
ATS-19-6		6-32					
	ATMS-19-6						

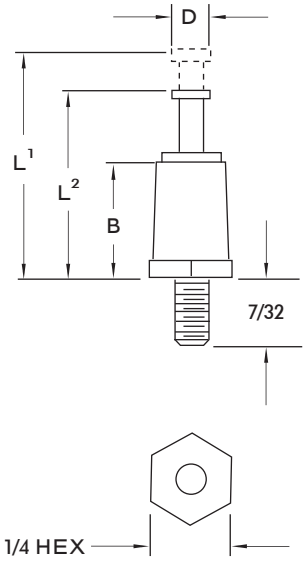

METAL BASE SHOWN

SEE PAGE 22 FOR MATERIAL SPECIFICATIONS AND ORDERING INSTRUCTIONS.

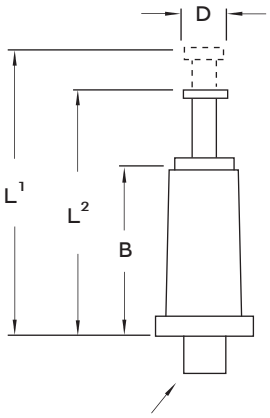

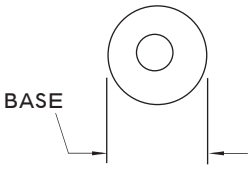

METAL BASE SHOWN

PLASTIC BASE	METAL BASE	RIVET SIZE		DIMENSIONS					BREAKDOWN VOLTAGE AC
		Dia.	Length	" B"	" L1"	" L2"	" D"	Base	
TR-12		0.098	3/32	3/8	23/32	19/32	9/64	1/4Hex.	6,000
	TMRR-12							9/32Dia.	
TLR-12			11/64					1/4Hex.	
	TMR-12	0.125	1/8					5/16Dia.	
TR-16		0.098	3/32	1/2	27/32	23/32		1/4Hex.	9,000
	TMRR-16							9/32Dia.	
TLR-16			11/64					1/4Hex.	
	TMR-16	0.125	1/8					5/16Dia.	
TR-17		0.098	3/32	17/32	7/8	3/4		1/4Hex.	10,000
	TMRR-17							9/32Dia.	
TLR-17			11/64					1/4Hex.	
	TMR-17	0.125	1/8					5/16Dia.	
TR-19		0.098	3/32	19/32	15/16	13/16		1/4Hex.	12,000
	TMRR-19							9/32Dia.	
TLR-19			11/64					1/4Hex.	
	TMR-19	0.125	1/8					5/16Dia.	
STR-12		0.098	3/32	3/8		19/32	9/64	1/4Hex.	6,000
	STMRR-12							9/32Dia.	
STLR-12			11/64					1/4Hex.	
	STMR-12	0.125	1/8					5/16Dia.	
STR-16		0.098	3/32	1/2		23/32		1/4Hex.	9,000
	STMRR-16							9/32Dia.	
STLR-16			11/64					1/4Hex.	
	STMR-16	0.125	1/8					5/16Dia.	
STR-17		0.098	3/32	17/32		3/4		1/4Hex.	10,000
	STMRR-17							9/32Dia.	
STLR-17			11/64					1/4Hex.	
	STMR-17	0.125	1/8					5/16Dia.	
STR-19		0.098	3/32	19/32		13/16		1/4Hex.	12,000
	STMRR-19							9/32Dia.	
STLR-19			11/64					1/4Hex.	
	STMR-19	0.125	1/8					5/16Dia.	
ATR-12		0.098	3/32	3/8	5/8	17/32	3/32	1/4Hex.	6,000
	ATMRR-12							9/32Dia.	
ATLR-12			11/64					1/4Hex.	
	ATMR-12	0.125	1/8					5/16Dia.	
ATR-16		0.098	3/32	1/2	3/4	21/32		1/4Hex.	9,000
	ATMRR-12							9/32Dia.	
ATLR-16			11/64					1/4Hex.	
	ATMR-12	0.125	1/8					5/16Dia.	
ATR-17		0.098	3/32	17/32	25/32	11/16		1/4Hex.	10,000
	ATMRR-17							9/32Dia.	
ATLR-17			11/64					1/4Hex.	
	ATMR-17	0.125	1/8					5/16Dia.	
ATR-19		0.098	3/32	19/32	27/32	3/4		1/4Hex.	12,000
	ATMRR-19							9/32Dia.	
ATLR-19			11/64					1/4Hex.	
	ATMR-19	0.125	1/8					5/16Dia.	

SEE PAGE 22 FOR MATERIAL SPECIFICATIONS AND ORDERING INSTRUCTIONS.

BIFURCATED SERIES

PLASTIC BASE	METAL BASE	THREAD SIZE	DIMENSIONS B	DIMENSIONS L	DIMENSIONS T	BREAKDOWN VOLTAGE AC
BT-12		4-40	3/8	5/8	5/32	6,000
	BMT-12					
BT-12-6		6-32				
	BMT-12-6					
BT-16		4-40	1/2	3/4	7/32	9,000
	BMT-16					
BT-16-6		6-32				
	BMT-16-6					
BT-17		4-40	17/32	25/32		10,000
	BMT-17					
BT-17-6		6-32				
	BMT-17-6					
BT-19		4-40	19/32	27/32		12,000
	BMT-19					
BT-19-6		6-32				
	BMT-19-6					

SBT-12		4-40	3/8	9/16	5/32	6,000
	SBMT-12					
SBT-12-6		6-32				
	SBMT-12-6					
SBT-16		4-40	1/2	11/16	7/32	9,000
	SBMT-16					
SBT-16-6		6-32				
	SBMT-16-6					
SBT-17		4-40	17/32	23/32		10,000
	SBMT-17					
SBT-17-6		6-32				
	SBMT-17-6					
SBT-19		4-40	19/32	25/32		12,000
	SBMT-19					
SBT-19-6		6-32				
	SBMT-19-6					

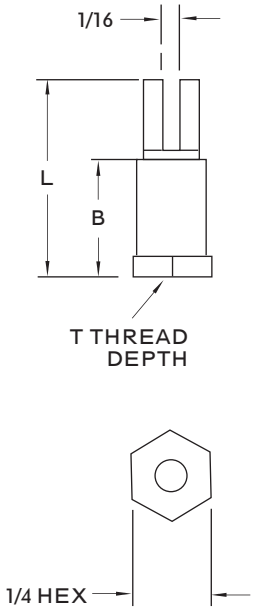

METAL BASE SHOWN

SEE PAGE 22 FOR MATERIAL SPECIFICATIONS AND ORDERING INSTRUCTIONS.

BIFURCATED SERIES

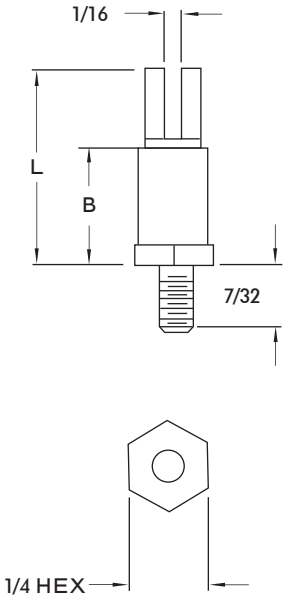

METAL BASE SHOWN

PLASTIC BASE	METAL BASE	THREAD SIZE	DIMENSIONS B	DIMENSIONS L	BREAKDOWN VOLTAGE AC
BS-12		4-40	3/8	5/8	6,000
	BMS-12				
BS-12-6		6-32			
	BMS-12-6				
BS-16		4-40	1/2	3/4	9,000
	BMS-16				
BS-16-6		6-32			
	BMS-16-6				
BS-17		4-40	17/32	25/32	10,000
	BMS-17				
BS-17-6		6-32			
	BMS-17-6				
BS-19		4-40	19/32	27/32	12,000
	BMS-19				
BS-19-6		6-32			
	BMS-19-6				

SBS-12		4-40	3/8	9/16	6,000
	SBMS-12				
SBS-12-6		6-32			
	SBMS-12-6				
SBS-16		4-40	1/2	11/16	9,000
	SBMS-16				
SBS-16-6		6-32			
	SBMS-16-6				
SBS-17		4-40	17/32	23/32	10,000
	SBMS-17				
SBS-17-6		6-32			
	SBMS-17-6				
SBS-19		4-40	19/32	25/32	12,000
	SBMS-19				
SBS-19-6		6-32			
	SBMS-19-6				

SEE PAGE 22 FOR MATERIAL SPECIFICATIONS AND ORDERING INSTRUCTIONS.

BIFURCATED SERIES

PLASTIC BASE	METAL BASE	RIVET SIZE		DIMENSIONS			BREAKDOWN VOLTAGE AC
		Dia.	Length	B	L	BASE	
BR-12		0.098	3/32	3/8	5/8	1/4Hex.	6,000
	BMRR-12					9/32Dia.	
BLR-12			11/64			1/4Hex.	
	BMR-12	0.125	1/8			5/16Dia.	
BR-16		0.098	3/32	1/2	3/4	1/4Hex.	9,000
	BMRR-16					9/32Dia.	
BLR-16			11/64			1/4Hex.	
	BMR-16	0.125	1/8			5/16Dia.	
BR-17		0.098	3/32	17/32	25/32	1/4Hex.	10,000
	BMRR-17					9/32Dia.	
BLR-17			11/64			1/4Hex.	
	BMR-17	0.125	1/8			5/16Dia.	
BR-19		0.098	3/32	19/32	27/32	1/4Hex.	12,000
	BMRR-19					9/32Dia.	
BLR-19			11/64			1/4Hex.	
	BMR-19	0.125	1/8			5/16Dia.	
SBR-12		0.098	3/32	3/8	9/16	1/4Hex.	6,000
	SBMRR-12					9/32Dia.	
SBLR-12			11/64			1/4Hex.	
	SBMR-12	0.125	1/8			5/16Dia.	
SBR-16		0.098	3/32	1/2	11/16	1/4Hex.	9,000
	SBMRR-16					9/32Dia.	
SBLR-16			11/64			1/4Hex.	
	SBMR-16	0.125	1/8			5/16Dia.	
SBR-17		0.098	3/32	17/32	23/32	1/4Hex.	10,000
	SBMRR-17					9/32Dia.	
SBLR-17			11/64			1/4Hex.	
	SBMR-17	0.125	1/8			5/16Dia.	
SBR-19		0.098	3/32	19/32	25/32	1/4Hex.	12,000
	SBMRR-19					9/32Dia.	
SBLR-19			11/64			1/4Hex.	
	SBMR-19	0.125	1/8			5/16Dia.	

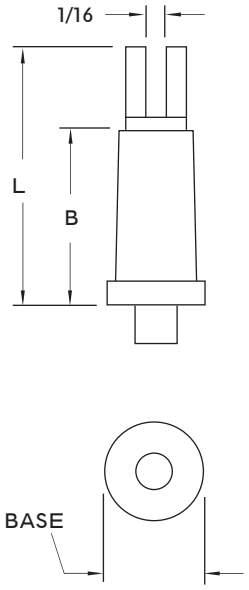

METAL BASE SHOWN

SEE PAGE 22 FOR MATERIAL SPECIFICATIONS AND ORDERING INSTRUCTIONS.

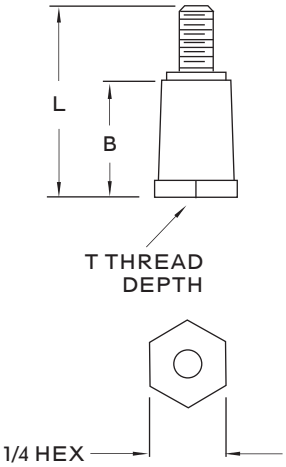

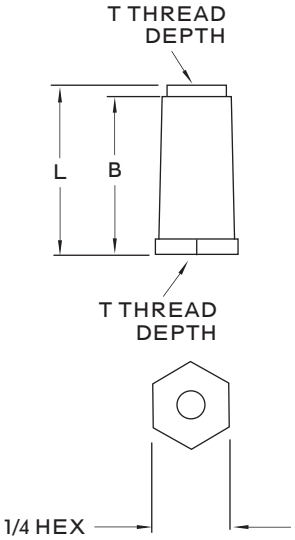

METAL BASE SHOWN

PLASTIC BASE	METAL BASE	THREAD SIZE	DIMENSIONS B	DIMENSIONS L	DIMENSIONS T	BREAKDOWN VOLTAGE AC
SIT-12		4-40	3/8	5/8	5/32	6,000
	SMT-12					
SIT-12-6		6-32				
	SMT-12-6					
SIT-16		4-40	1/2	3/4	7/32	9,000
	SMT-16					
SIT-16-6		6-32				
	SMT-16-6					
SIT-17		4-40	17/32	25/32		10,000
	SMT-17					
SIT-17-6		6-32				
	SMT-17-6					
SIT-19		4-40	19/32	27/32		12,000
	SMT-19					
SIT-19-6		6-32				
	SMT-19-6					

PT-16		4-40	1/2	17/32	5/32	9,000
	PMT-16					
PT-16-6		6-32				
	PMT-16-6					
PT-17		4-40	17/32	9/16		10,000
	PMT-17					
PT-17-6		6-32				
	PMT-17-6					
PT-19		4-40	19/32	5/8		12,000
	PMT-19					
PT-19-6		6-32				
	PMT-19-6					

SEE PAGE 22 FOR MATERIAL SPECIFICATIONS AND ORDERING INSTRUCTIONS.

THREADED SERIES

PLASTIC BASE	METAL BASE	THREAD SIZE	DIMENSIONS B	DIMENSIONS L	DIMENSIONS T	BREAKDOWN VOLTAGE AC
ITS-12		4-40	3/8	13/32	5/32	6,000
	ITMS-12					
ITS-12-6		6-32				
	ITMS-12-6					
ITS-16		4-40	1/2	17/32		9,000
	ITMS-16					
ITS-16-6		6-32				
	ITMS-16-6					
ITS-17		4-40	17/32	9/16		10,000
	ITMS-17					
ITS-17-6		6-32				
	ITMS-17-6					
ITS-19		4-40	19/32	5/8		12,000
	ITMS-19					
ITS-19-6		6-32				
	ITMS-19-6					

SS-12		4-40	3/8	5/8		6,000
	SMS-12					
SS-12-6		6-32				
	SMS-12-6					
SS-16		4-40	1/2	3/4		9,000
	SMS-16					
SS-16-6		6-32				
	SMS-16-6					
SS-17		4-40	17/32	25/32		10,000
	SMS-17					
SS-17-6		6-32				
	SMS-17-6					
SS-19		4-40	19/32	27/32		12,000
	SMS-19					
SS-19-6		6-32				
	SMS-19-6					

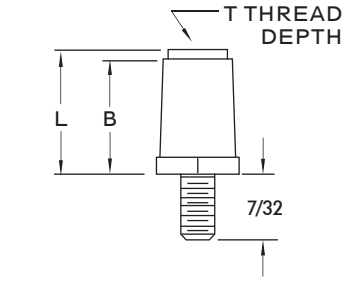

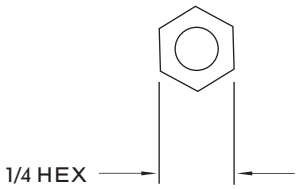

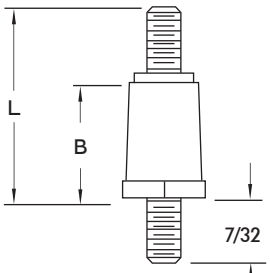

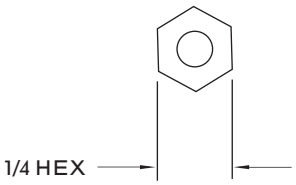

METAL BASE SHOWN

SEE PAGE 22 FOR MATERIAL SPECIFICATIONS AND ORDERING INSTRUCTIONS.

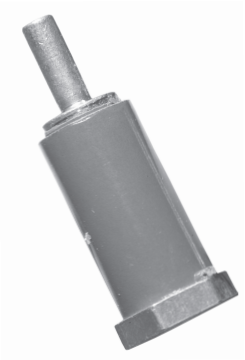

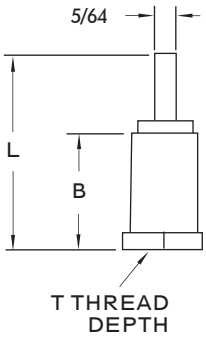

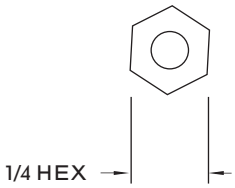

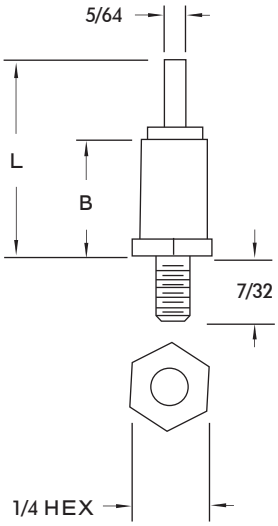

METAL BASE SHOWN

PLASTIC BASE	METAL BASE	THREAD SIZE	DIMENSIONS B	DIMENSIONS L	DIMENSIONS T	BREAKDOWN VOLTAGE AC
RTT-12		4-40	3/8	5/8	5/32	6,000
	RTMT-12					
RTT-12-6		6-32				
	RTMT-12-6					
RTT-16		4-40	1/2	3/4	7/32	9,000
	RTMT-16					
RTT-16-6		6-32				
	RTMT-16-6					
RTT-17		4-40	17/32	25/32		10,000
	RTMT-17					
RTT-17-6		6-32				
	RTMT-17-6					
RTT-19		4-40	19/32	27/32		12,000
	RTMT-19					
RTT-19-6		6-32				
	RTMT-19-6					

RTS-12		4-40	3/8	5/8		6,000
	RTMS-12					
RTS-12-6		6-32				
	RTMS-12-6					
RTS-16		4-40	1/2	3/4		9,000
	RTMS-16					
RTS-16-6		6-32				
	RTMS-16-6					
RTS-17		4-40	17/32	25/32		10,000
	RTMS-17					
RTS-17-6		6-32				
	RTMS-17-6					
RTS-19		4-40	19/32	27/32		12,000
	RTMS-19					
RTS-19-6		6-32				
	RTMS-19-6					

SEE PAGE 22 FOR MATERIAL SPECIFICATIONS AND ORDERING INSTRUCTIONS.

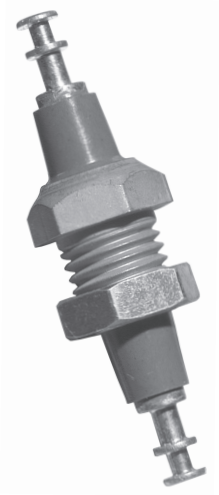

TYPE FT-85

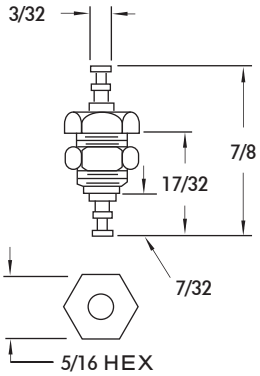

The FT- 85 is a Miniature Type Feed Through Terminal used for passing currents through panels and chassis. The feed through pin is MOLDED into place providing a solid tie point. The molded thread allows for maximum creepage.

SPECIFICATIONS

ELECTRICAL

Wire Size Maximum. . . . . .Two #20 AWG or Three #22 AWG

Voltage Breakdown. . . . . 4500 VRMS

MECHANICAL

Solder Terminal. . . . . Brass-Hot Solder Dipped, Centriuged & Reflowed

Mounting Nut. . . . . .Brass-Cadmium Plated with Gold Iridite Finish

Insulation Material. . . . . .Choice of "MIL Approved" Thermosetting Insulations (see page 22)

TYPE FT-86

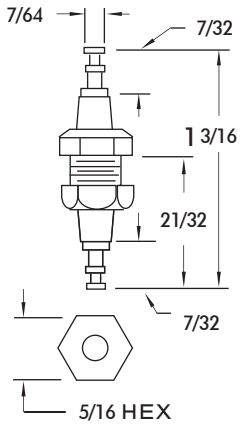

The FT-86 Feed Through Terminal used for passing currents through panels, chassis and bulkheads was designed for Communication, Aircraft and Instrumentation Work. The Feed Through Pin is MOLDED into place providing a solid tie point. The threaded bushing protects the insulation from breakage in mounting.

SPECIFICATIONS

ELECTRICAL

Wire Size Maximum. . . . . .Two #20 AWG or Three #22 AWG

Voltage Breakdown. . . . . 3300 VRMS Minimum

MECHANICAL

Solder Terminal. . . . . .Brass-Hot Solder Dipped, Centriuged & Reflowed

Mounting Bushing and Nut. . . . . .Brass-Cadmium Plated with Gold Iridite Finish

Insulation Material. . . . . Choice of "MIL Approved" Thermosetting Insulations (see page 22)

SEE PAGE 22 FOR MATERIAL SPECIFICATIONS AND ORDERING INSTRUCTIONS.

FT-87
MEETS SPECIFICATION 201610001-10
WITH INSULATION MATERIAL "L"
(SEE PAGE 22)

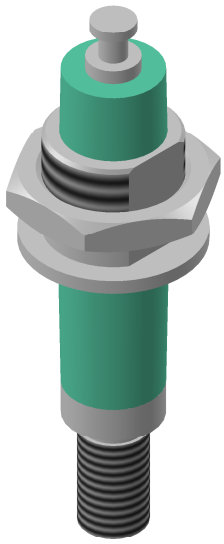

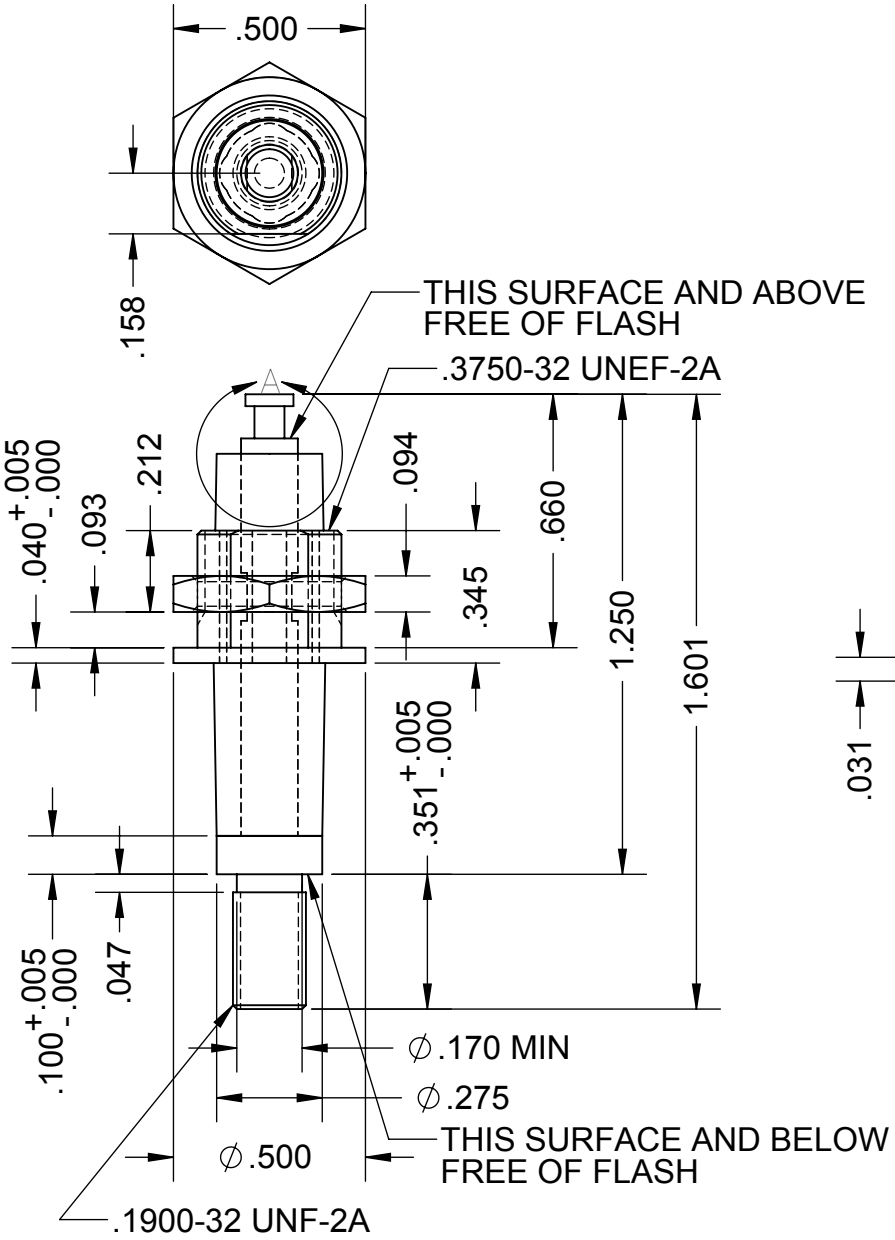

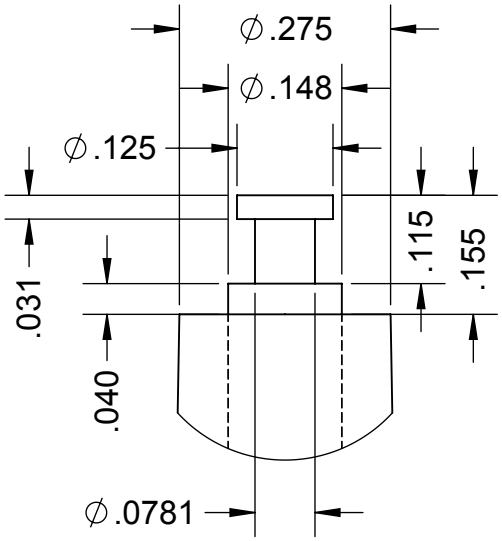

DETAIL A

FOR MECHANICAL AND ELECTRICAL SPECIFICATIONS SEE PAGE 16

FT-87

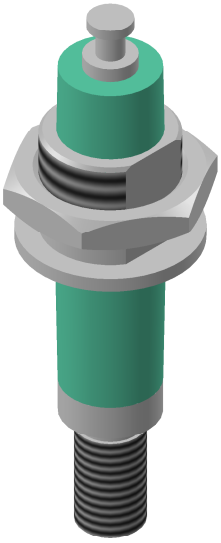

SPECIFICATIONS

ELECTRICAL

Current Rating.....20 AMP MAX @ 28 VDC
Dielectric Strength.....3000 VAC @ 60 Hz

MECHANICAL

Terminal Material & Finish.....Brass, 1/2 Hard Per ASTM B36, Electro Tin Plate .0003 In. Min. Thk. Per ASTM B545 Over .0001 In. Min. Thk. Copper Plate Per SAE AMS2418
Insulation Material.....Per ASTM D5948, Type SDG-F, Color: Light Green
Mounting Bushing & Nut Material & Finish.....Brass, 1/2 Hard Per ASTM B36, Cadmium Plate Per SAE AMS-QQ-P-416, Type I, Class 2
Shock.....450 G @ 18 Hz
Torque.....15 In-Lbf Applied To Center Terminal

Alternate Insulation Material Available.....Choice of "L" Color: Light Green, "L2" Color: Black, Or "J" Color: Dark Green Comparable Thermosetting Insulations (see page 22)

TERMINAL BOARDS

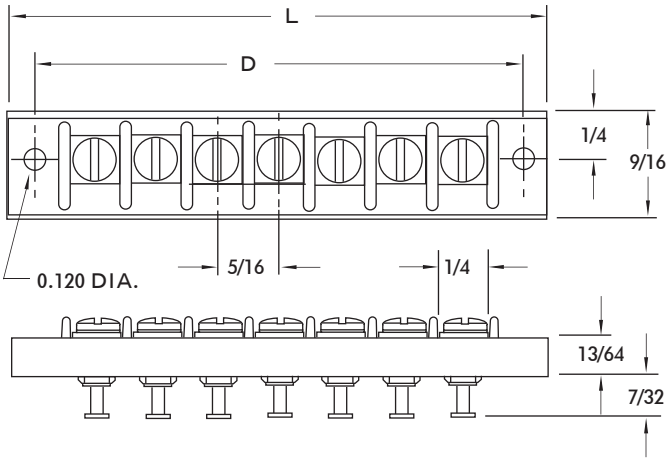

	NUMBER OF TERMINALS						
	1	2	3	4	5	6	7
L	7/8	1 3/16	1 1/2	1 13/16	2 1/8	2 7/16	2 3/4
D	5/8	15/16	1 1/4	1 9/16	1 7/8	2 3/16	2 1/2

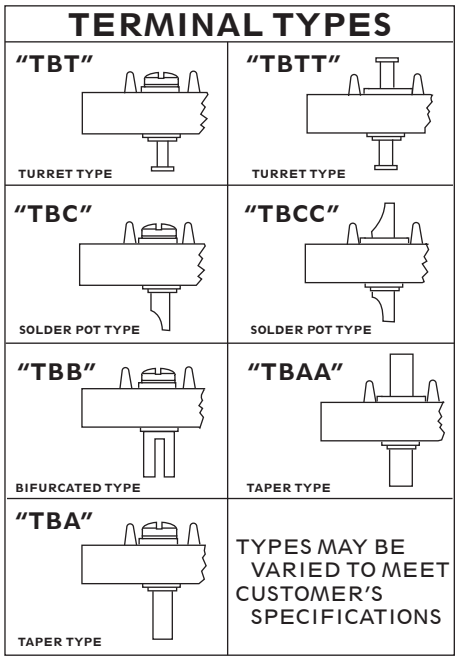

SPECIFICATIONS

ELECTRICAL

Wire Size

Solder Pot Type. . . . . .One #14 AWG
Turret Type. . . . . .Two #14 AWG or Three #18 AWG
Bifurcated Type. . . . . Two #14 AWG or Three #18 AWG
Taper Type. . . . . .One "AMP" Taper Pin
Voltage Breakdown. . . . . 3500 VRMS

MECHANICAL

Creepage Between Contacts. . . . . .5/32"
Air Space Between Contacts. . . . . .1/8"
Terminals. . . . . .Brass-Gold Plated over Copper Plate
Insulation Material . . . . . Choice of "MIL APPROVED" Thermosetting Insulations. (see page 22)
Weight (TBT-7). . . . . .0.60 Oz.

ORDERING INSTRUCTIONS

Order type designation as shown above adding -1, -2, -3, etc. for number of terminals required, i.e.

TBT-7	TBTT-6
TBC-3	TBAA-5

SEE PAGE 22 FOR MATERIAL SPECIFICATIONS AND ORDERING INSTRUCTIONS.

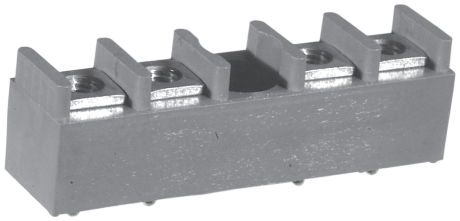

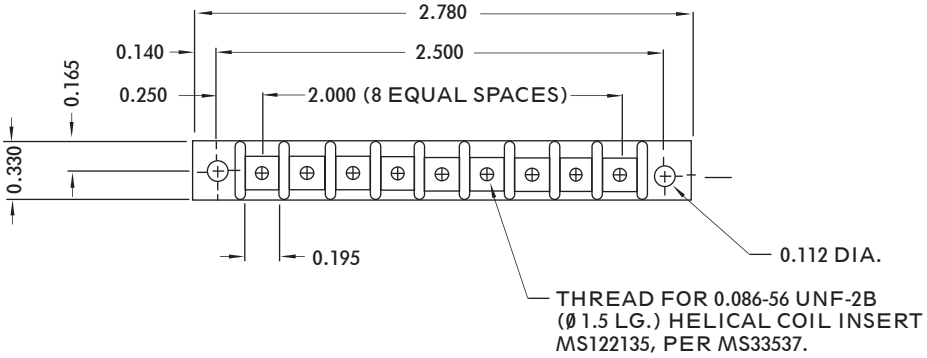

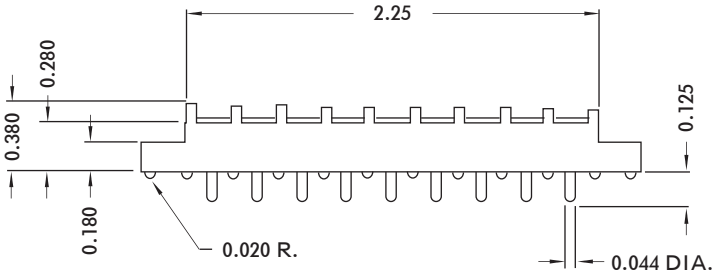

TBST-9 JNF

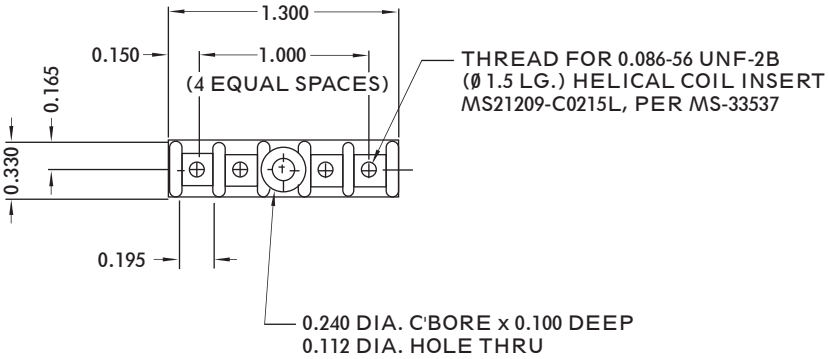

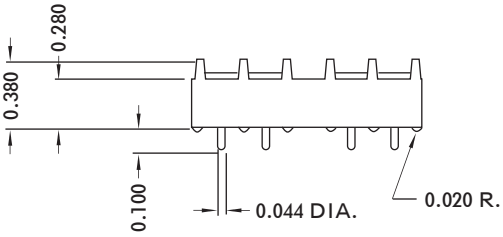

TBSS-4 JNF

SEE PAGE 22 FOR MATERIAL SPECIFICATIONS AND ORDERING INSTRUCTIONS.

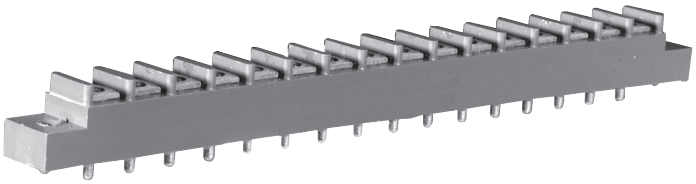

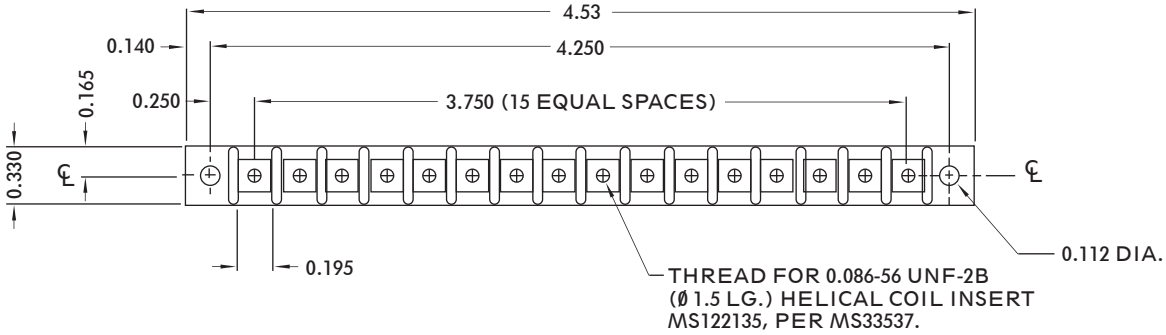

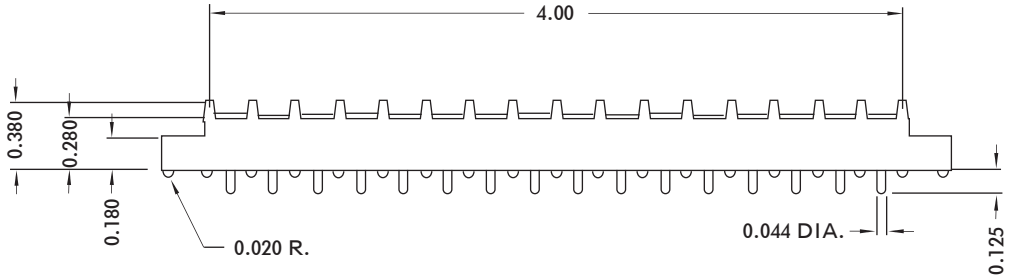

TBST-16 JNF

SEE PAGE 22 FOR MATERIAL SPECIFICATIONS AND ORDERING INSTRUCTIONS.

PART NO.	"A"	BREAKDOWN VOLTAGE AC
GSTMTC-124	0.062	10,000
GSTMTC-127	0.070	10,000

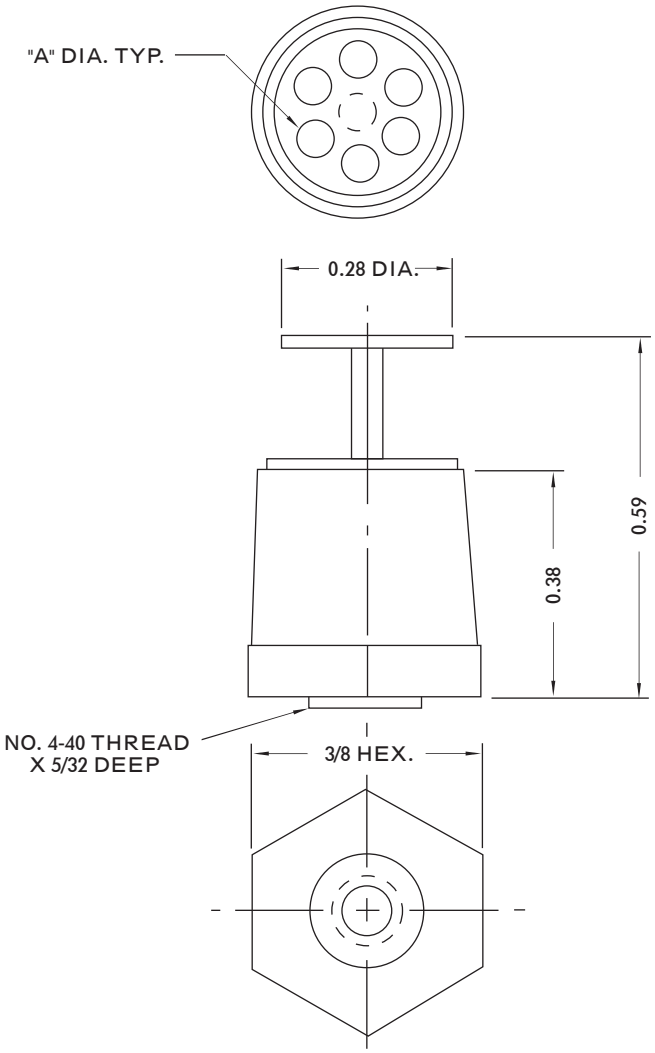

SEE PAGE 22 FOR MATERIAL SPECIFICATIONS AND ORDERING INSTRUCTIONS.

PART NO.	L	B	THREAD SIZE	C	BREAKDOWN VOLTAGE A.C.
GSTMSC-126	0.59	0.38	6-32	0.22	11,000
GSTMSC-126-3	0.59	0.38	6-32	0.37	11,000

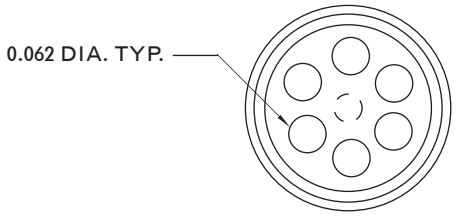

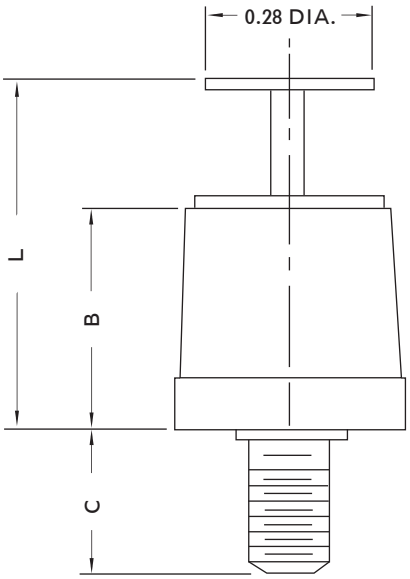

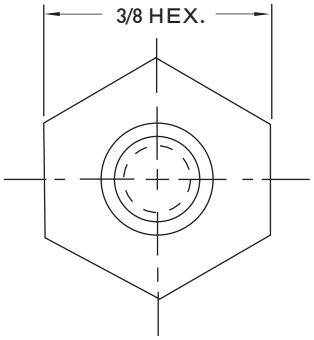

SEE PAGE 22 FOR MATERIAL SPECIFICATIONS AND ORDERING INSTRUCTIONS.

ORDERING INSTRUCTIONS

TMT-12 J V2

- V2 — SUFFIX 2 TERMINAL PLATING AND MOUNTING PLATING
- J — SUFFIX 1 INSULATION MATERIAL
- TMT-12 — SERIES

MATERIAL CERTIFICATIONS

SUFFIX 1

J	DIALLYL PHTHALATE, GLASS-FIBER FILLED PER MIL-M-14, TYPE GDI 30F
L	DIALLYL PHTHALATE, GLASS-FIBER FILLED PER MIL-M-14, TYPE SDG-F
L2	DIALLYL PHTHALATE, GLASS-FIBER FILLED PER MIL-M-14, TYPE SDG-F COLOR BLACK
H	DIALLYL PHTHALATE, ORLON-FILLED PER MIL-M-14, TYPE SDI-5

SUFFIX 2

NONE	NO SUPPLEMENTARY CONTACT TERMINAL FINISH, OR HOT SOLDER DIP, CENTRIFUGED AND REFLOWED, SOLDER PER QQ-S-571 (STANDARD NO SUFFIX REQUIRED)
F	SOLDER (60-40) WITH WATER SOLUBLE ROSIN FLUX
V2	GOLD PLATE (0.00005) PER MIL-G-45204, TYPE II, CLASS 1 OVER COPPER PLATE

OTHER PLATINGS AVAILABLE UPON REQUEST

GENERAL

1. MEET OR EXCEED APPLICABLE REQUIREMENTS OF MIL-T-55155
2. CONTACTS GOLD PLATED FOR LOW CONTACT RESISTANCE

MATERIAL AND FINISH SPECIFICATIONS

STAINLESS STEEL	QQ-S-763/766 TYPE 303 (NON-MAGNETIC)
BRASS	QQ-B-626
CADMIUM PLATE	QQ-P-416, TYPE II, CLASS 2
NICKEL PLATE	QQ-N-290, TYPE VI, CLASS 1
PASSIVATE	QQ-P-35 / AMS 2700

ARMEL ELECTRONICS, INC.
1601 75TH STREET NORTH BERGEN, NJ 07047

FAX 201-869-4304
WEBSITE WWW.ARMELELECTRONICS.COM E-MAIL INFO@ARMELELECTRONICS.COM